US007859554B2

(12) **United States Patent**
Young

(10) **Patent No.: US 7,859,554 B2**
(45) **Date of Patent: Dec. 28, 2010**

(54) **APPARATUS, METHODS, AND SYSTEMS FOR MULTI-PRIMARY DISPLAY OR PROJECTION**

(76) Inventor: **Garrett J. Young**, 1713 S. 2nd St., Oskaloosa, IA (US) 52577

(*) Notice: Subject to any disclaimer, the term of this patent is extended or adjusted under 35 U.S.C. 154(b) by 1025 days.

(21) Appl. No.: **11/557,861**

(22) Filed: **Nov. 8, 2006**

(65) **Prior Publication Data**

US 2007/0103646 A1 May 10, 2007

Related U.S. Application Data

(60) Provisional application No. 60/734,701, filed on Nov. 8, 2005.

(51) **Int. Cl.**
G09G 5/10 (2006.01)

(52) **U.S. Cl.** **345/690**; 345/84; 345/85; 345/88; 345/204

(58) **Field of Classification Search** 345/55, 345/60, 72, 76, 82, 83, 84, 87, 88, 204, 690
See application file for complete search history.

(56) **References Cited**

U.S. PATENT DOCUMENTS

6,570,584	B1 *	5/2003	Cok et al.	345/690
6,633,302	B1	10/2003	Ohsawa et al.	
6,870,523	B1	3/2005	Ben-David et al.	
6,873,339	B2 *	3/2005	Ohsawa et al.	345/604
6,922,198	B2 *	7/2005	Lee et al.	345/603
6,962,414	B2	11/2005	Roth	
6,984,043	B2 *	1/2006	Nakamura et al.	353/94
7,004,602	B2	2/2006	Waters	
7,598,961	B2 *	10/2009	Higgins	345/589
2003/0214499	A1 *	11/2003	Ohsawa et al.	345/204
2004/0046939	A1 *	3/2004	Nakamura et al.	353/7
2004/0252130	A1 *	12/2004	Lee et al.	345/603

(Continued)

FOREIGN PATENT DOCUMENTS

EP	1528315	A	5/2005

(Continued)

OTHER PUBLICATIONS

International Application Serial No. 1528315A2, "International Preliminary Report on Patentability" dated Jun. 2, 2008, 11 pgs.

(Continued)

Primary Examiner—My-Chau T Tran
(74) *Attorney, Agent, or Firm*—Schwegman, Lundberg & Woessner P.A.

(57) **ABSTRACT**

An apparatus, methods, and systems for multi-color projection or display for video or lighting applications. One aspect of the present invention comprises an algorithm for utilizing at least four primary light sources to represent a projected pixel color. The algorithm and associated system can be applied to both a natively monochromatic light source or traditional light sources filtered for their colored components. The algorithm can be used for either color sequential or parallel modes of operation. The algorithm takes input pixel data represented in a universal color coordinate system, performs a color transform, and disperses the results among parallel display devices or sequentially to a single device such that each pixel is presented by the combination of four or more primaries.

50 Claims, 33 Drawing Sheets

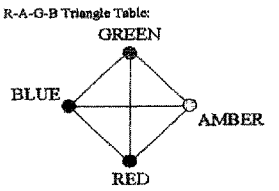

TRIANGLE	VERTICES
1	*RAG*
2	*AGB*
3	*GBR*
4	*BRA*

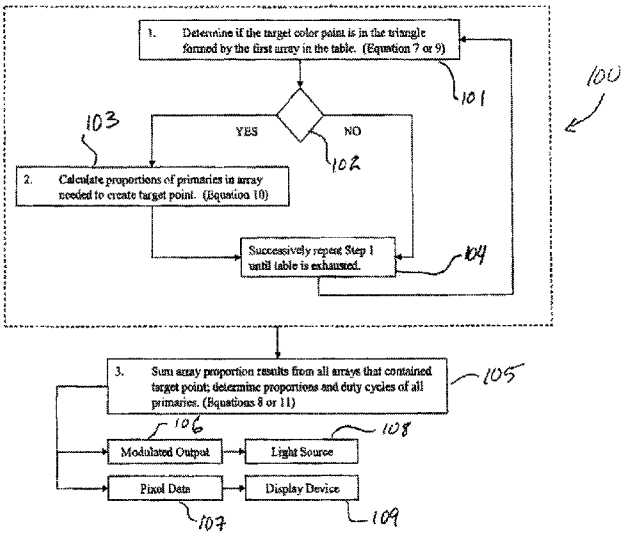

U.S. PATENT DOCUMENTS

2005/0083341	A1*	4/2005	Higgins et al.	345/590
2005/0156103	A1	7/2005	May et al.	
2005/0212728	A1*	9/2005	Miller et al.	345/76

FOREIGN PATENT DOCUMENTS

EP	1569467	A	8/2005
GB	2389706	A	12/2003
WO	WO-2007056541	A2	5/2007

OTHER PUBLICATIONS

International Search Report; PCT/US2006/043696, Nov. 8, 2006.
From the International Searching Authority: Invitation to Pay Additional Fees mailed on Dec. 6, 2007; PCT/US2006/043696, Nov. 8, 2006.
Lindbloom, Bruce Justin, "RGB/XYZ Matrices." Apr. 20, 2003, Nov. 7, 2005. <http://www.brucelindbloom.com/index/html?Eqn_RGB_XYZ_Matrix.html>.
Mutha, Subramanian & James Gaines: "Red, Green and Blue LED-based White Light Source: Implementation Challenges and Control Design." Industry Applications Conference, 2003, 38th IAS Annual Meeting (Oct. 12-16, 2003). vol. 1: 515-522.
Wikipedia: "PID Controller," Nov. 5, 2005, Nov. 7, 2005. <http://www.en.wikipedia.org/wiki/PID_controller>.
Poynton, Charles "Sensing color with the TAOS TCS230" May 17, 2005 TAOS, Inc., pp. 1-15.
"Featured Technology: Liquid Cooling System (LCS) for Microprocessor Thermal Management", Thermacore International. [online]. [archived Jun. 17, 2005]. Retrieved from the Internet: <URL: http://web.archive.org/web/20050617080253/http://www.thermcore.corm>, 1 pg.
"Polarization Recycling for Lighting LCDs More Efficiently", [online]. [retrieved Aug. 31, 2005]. Retrieved from the Internet: <URL: http://web.archive.org/web/20050831083624/www.nasatech.com/Briefs/June01/NPO20824.html, (Jun. 1, 2001), 3 pgs.
"RGB/XYZ Matrices", (Undated), 1 pg.
"Sensing color with the TAOS TCS230", © 2005 TAOS, Inc., (2005), 15 pgs.
"Symbology Overlay", DDC Digital Design Corporation [online]. [archived May 6, 2006]. Retrieved from the Internet: <URL: http://web.archive.org/web/20060506171116/http://www.digidescorp.com/products/IP/DataSheets/DDC_symbology_overlay.pdf>, 4 pgs.
"The TAOS Inc. Product Family", (c) 2005 TAOS Inc. / Texas Advanced Optoelectronic Solutions. [online]. [archived Oct. 24, 2005]. Retrieved from the Internet: <URL: http://web.archive.org/web/20051024004240/http://www.taosinc.com/>, (2005), 1 pg.
"What is a Heatpipe?", Thermacore Europe. [online]. [archived Mar. 6, 2005]. Retrieved from the Internet:: <URL: http://web.archive.org/web/20050306123815/http://www.thermacore-europe.com/>, 1 pg.
Davis, W., et al., "Color quality scale", *Optical Engineering*, 49(3), (Mar. 2010), 033602-1-033602-16.

* cited by examiner

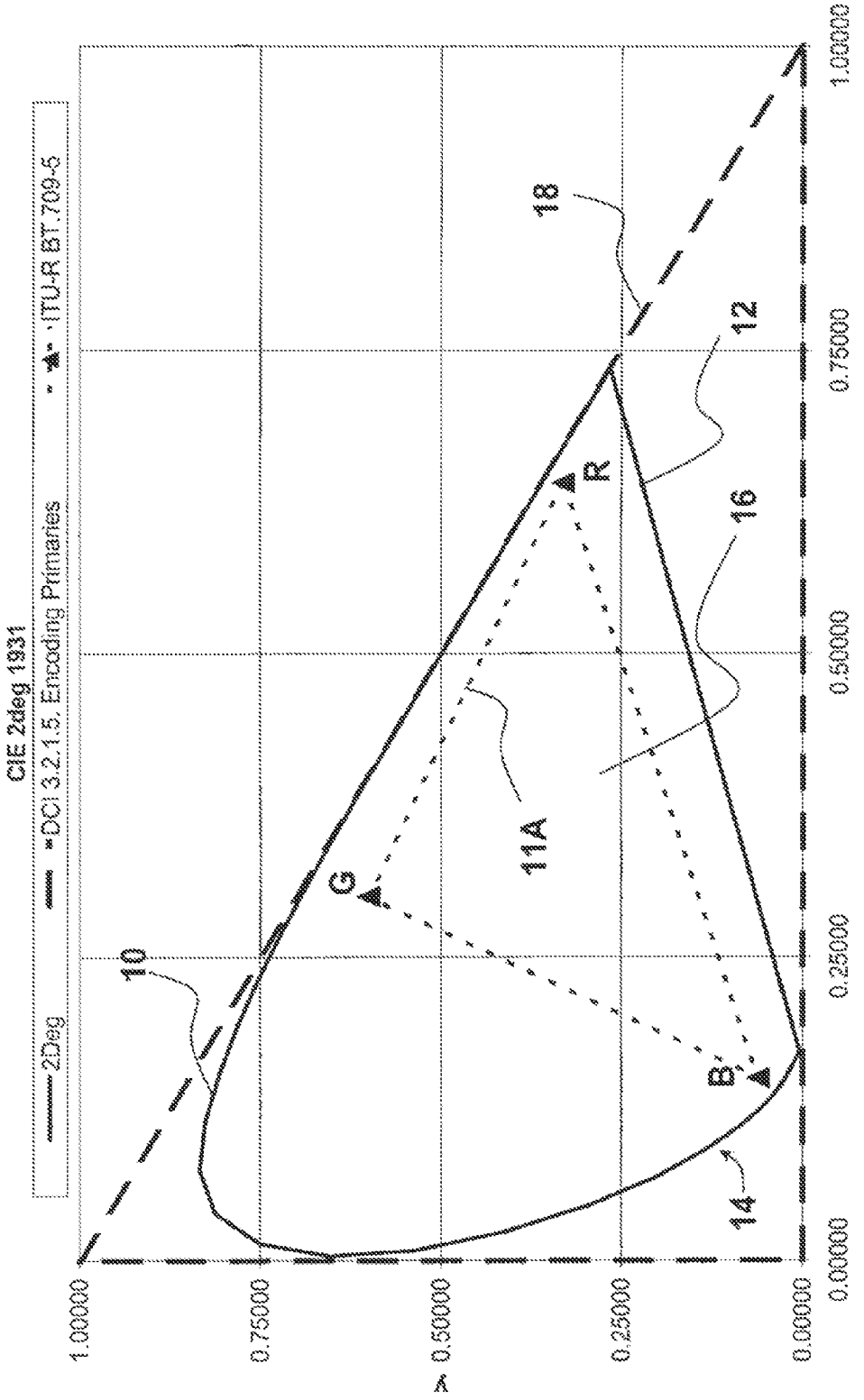

FIG. 1A
(PRIOR ART)

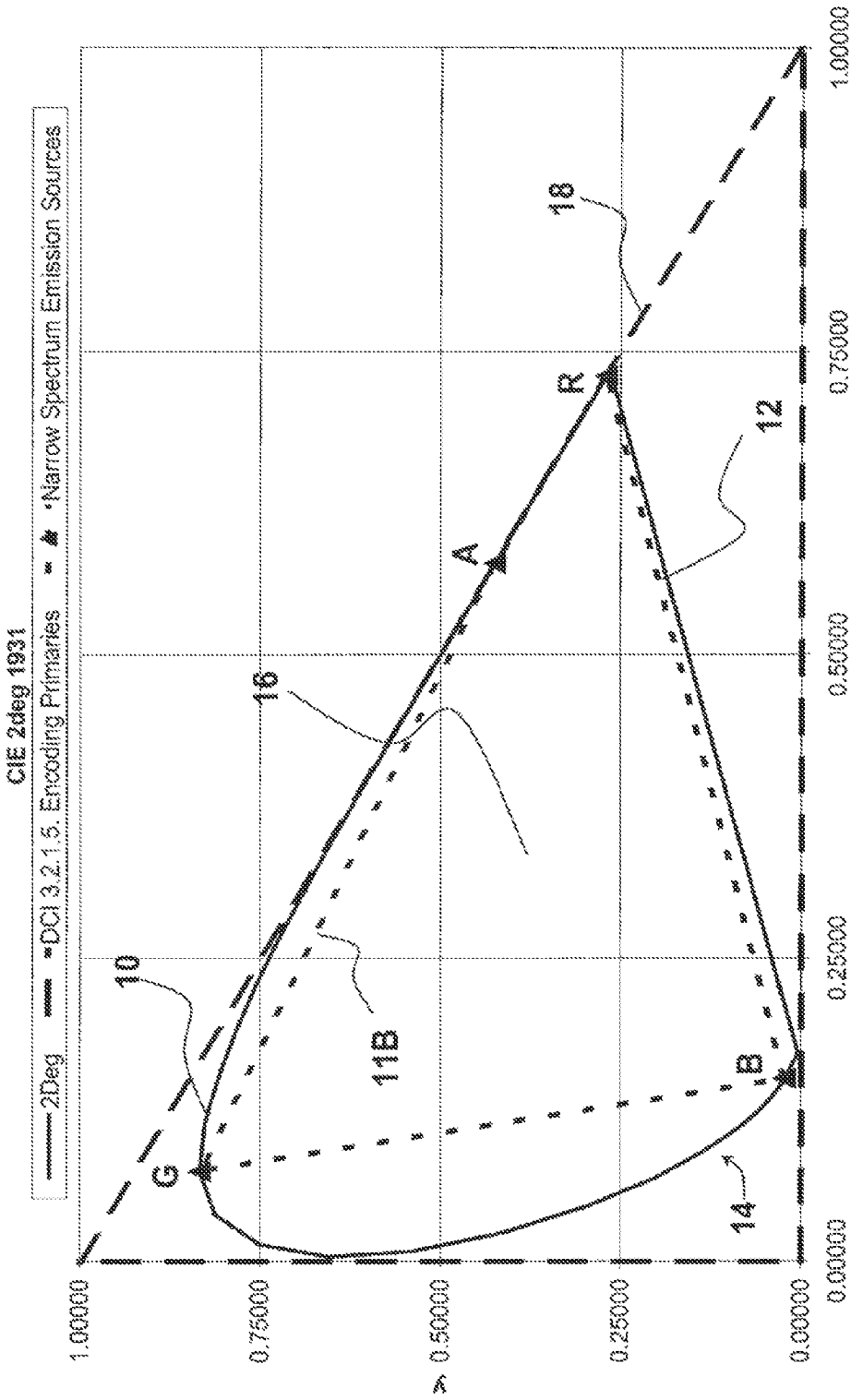

FIG. 1B
(PRIOR ART)

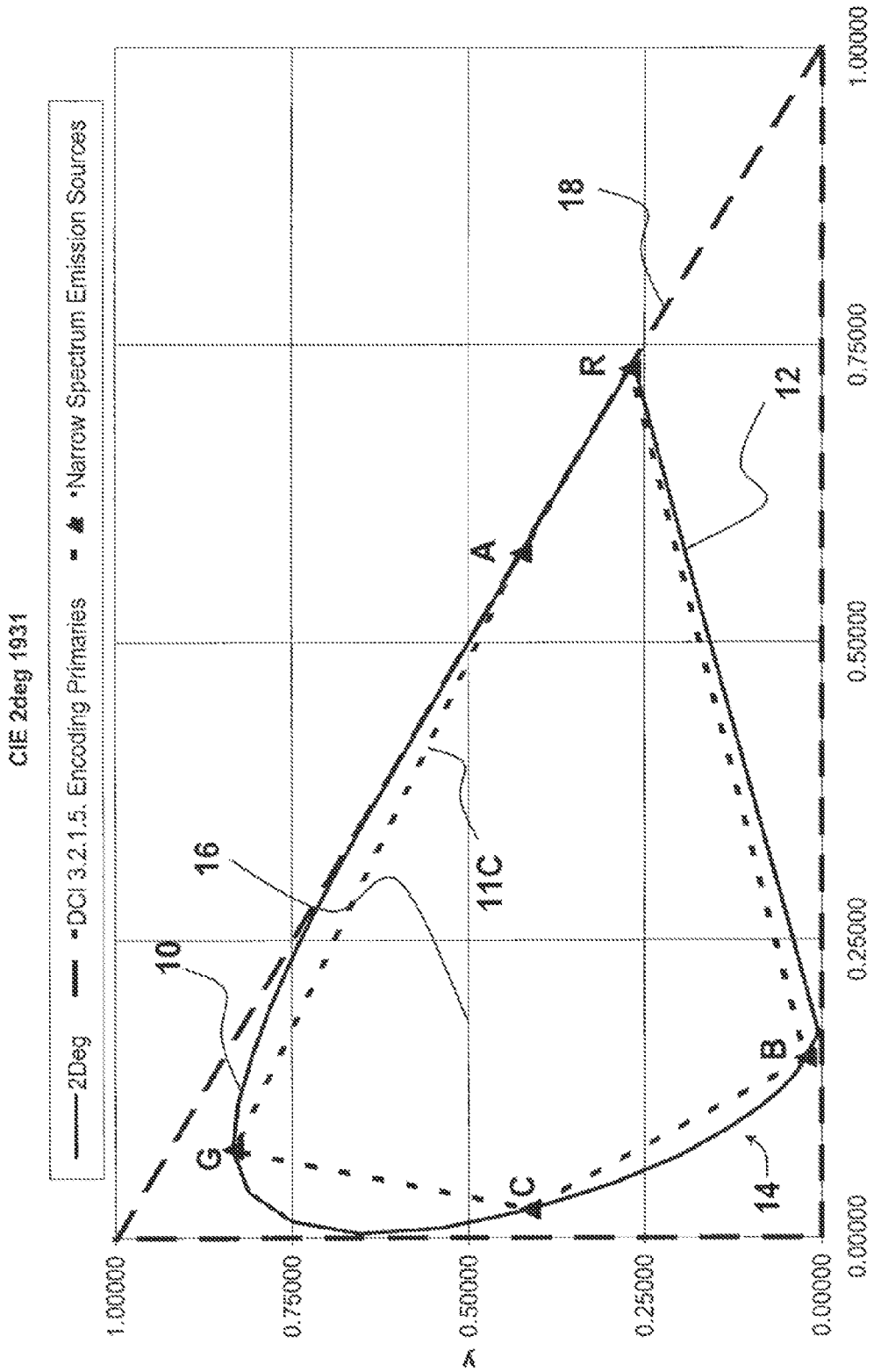

FIG. 1C
(PRIOR ART)

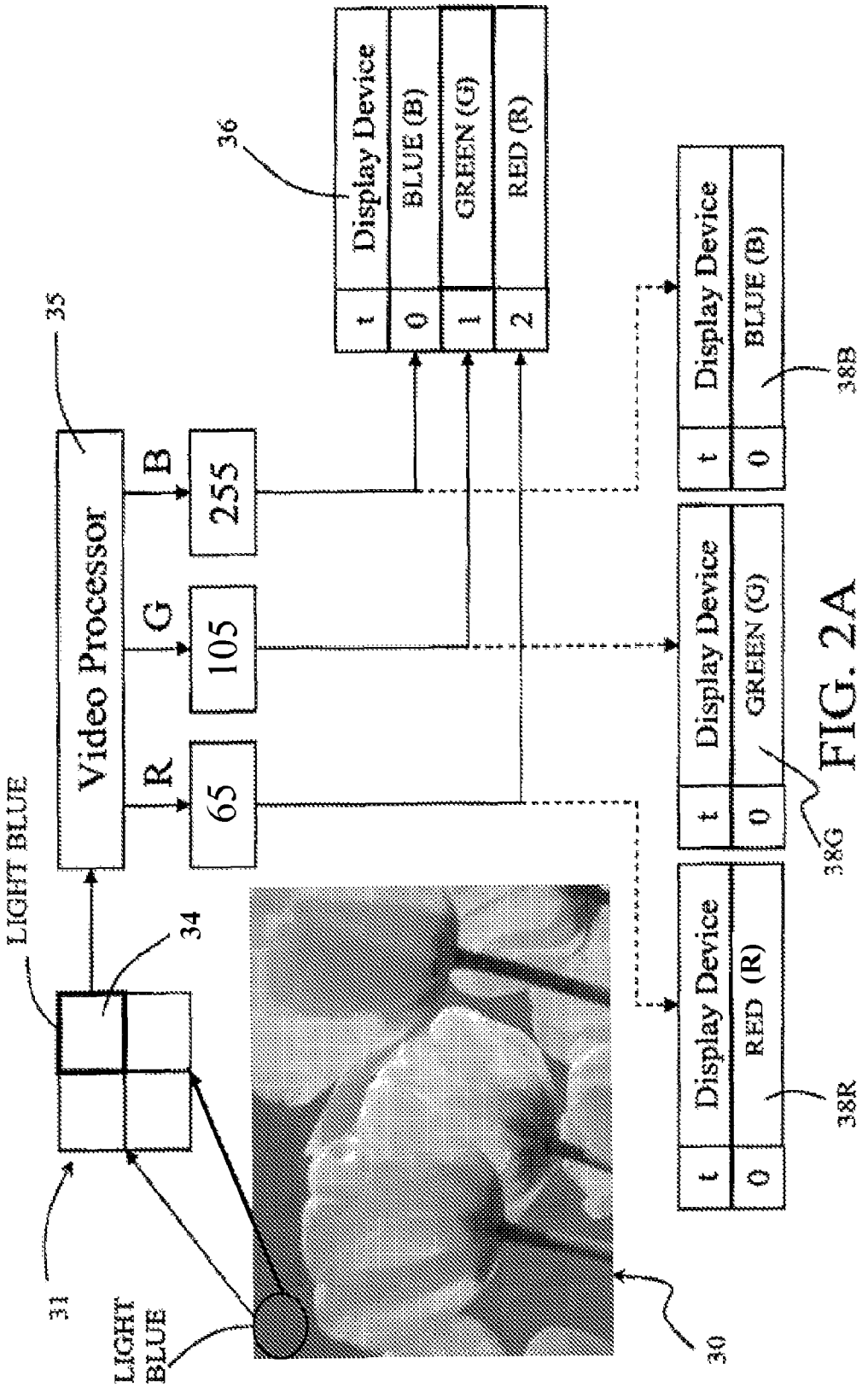
LIGHT BLUE
31
LIGHT BLUE
34
35
Video Processor
R
G
B
65
105
255
36
t
Display Device
0
BLUE (B)
1
GREEN (G)
2
RED (R)
30
38R
38G
38B

FIG. 2A

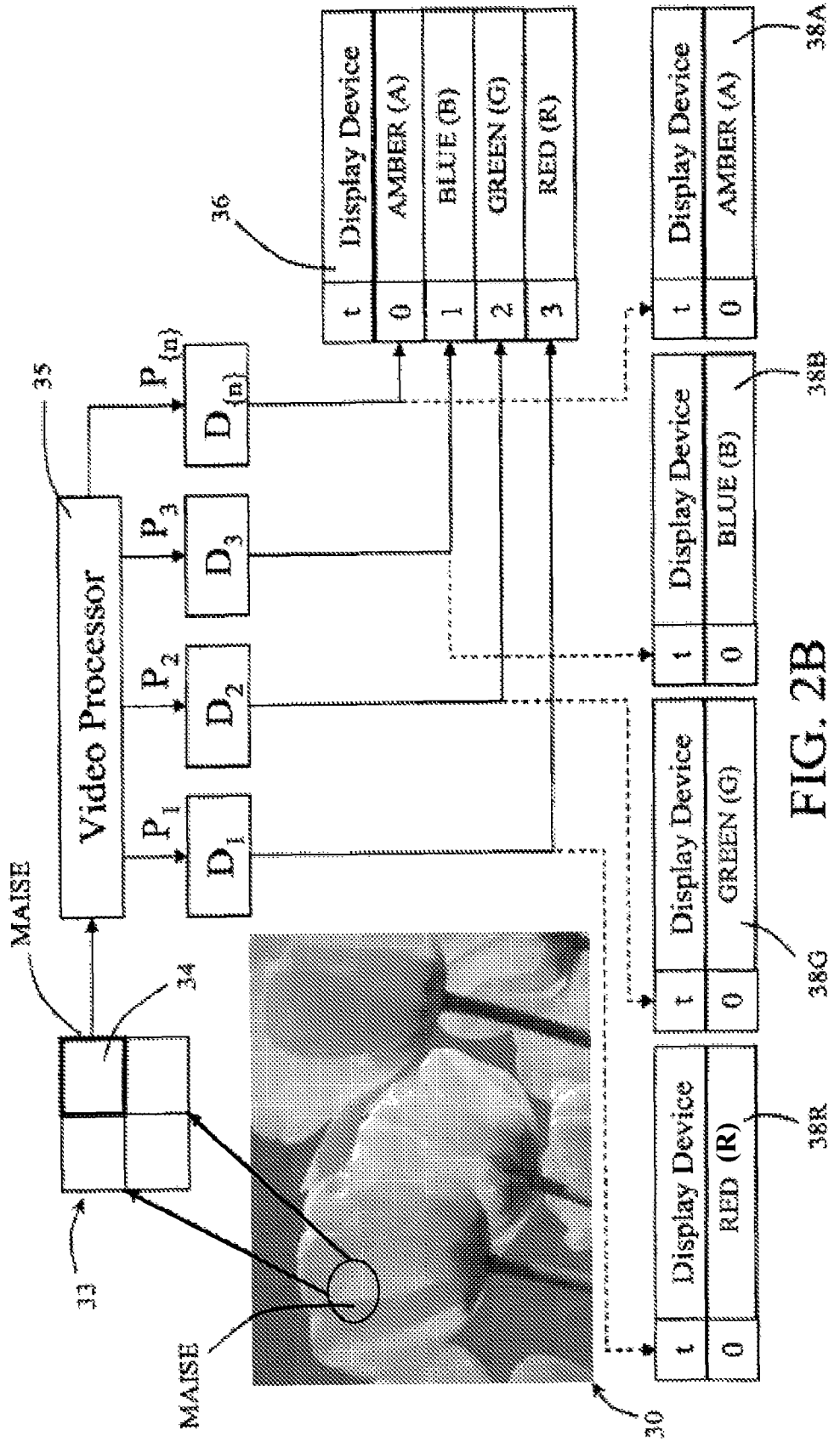
MAISE
33
34
MAISE
30
35
Video Processor
P1
P2
P3
P(n)
D1
D2
D3
D(n)
36
t
0
1
2
3
Display Device
AMBER (A)
BLUE (B)
GREEN (G)
RED (R)
38R
38G
38B
38A

FIG. 2B

R-A-G-B Triangle Table:

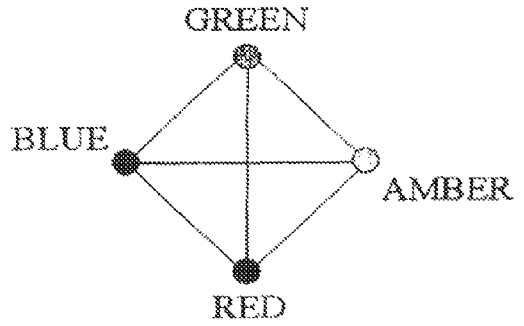

TRIANGLE	VERTICES
1	*RAG*
2	*AGB*
3	*GBR*
4	*BRA*

Fig. 3A

R-A-C-G-B Triangle Table

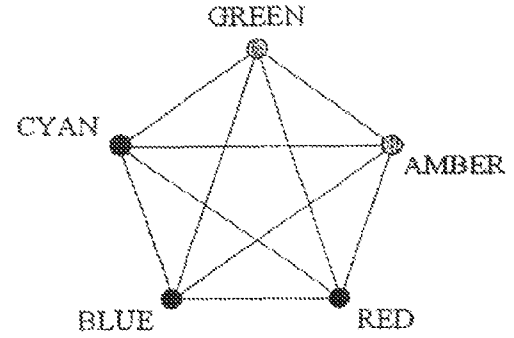

TRIANGLE	VERTICES
1	*RAG*
2	*AGC*
3	*GCB*
4	*RCB*
5	*RAB*
6	*RAC*
7	*AGB*
8	*RGC*
9	*ACB*
10	*RGB*

Fig. 3B

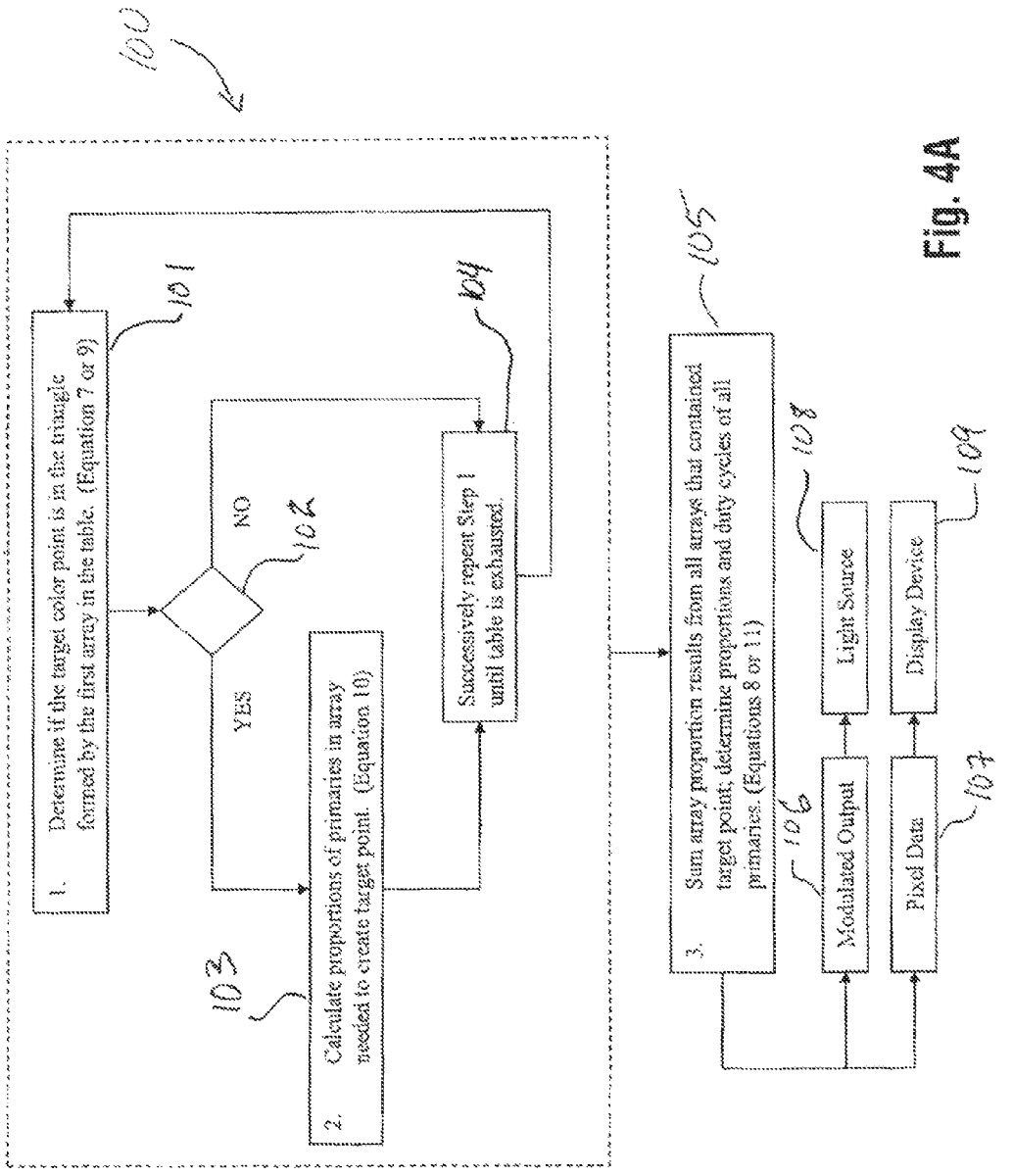
100
1. Determine if the target color point is in the triangle formed by the first array in the table. (Equation 7 or 9)
101
NO
102
YES
2. Calculate proportions of primaries in array needed to create target point. (Equation 10)
103
Successively repeat Step 1 until table is exhausted.
104
3. Sum array proportion results from all arrays that contained target point; determine proportions and duty cycles of all primaries. (Equations 8 or 11)
105
Modulated Output
106
Pixel Data
107
Light Source
108
Display Device
109

Fig. 4A

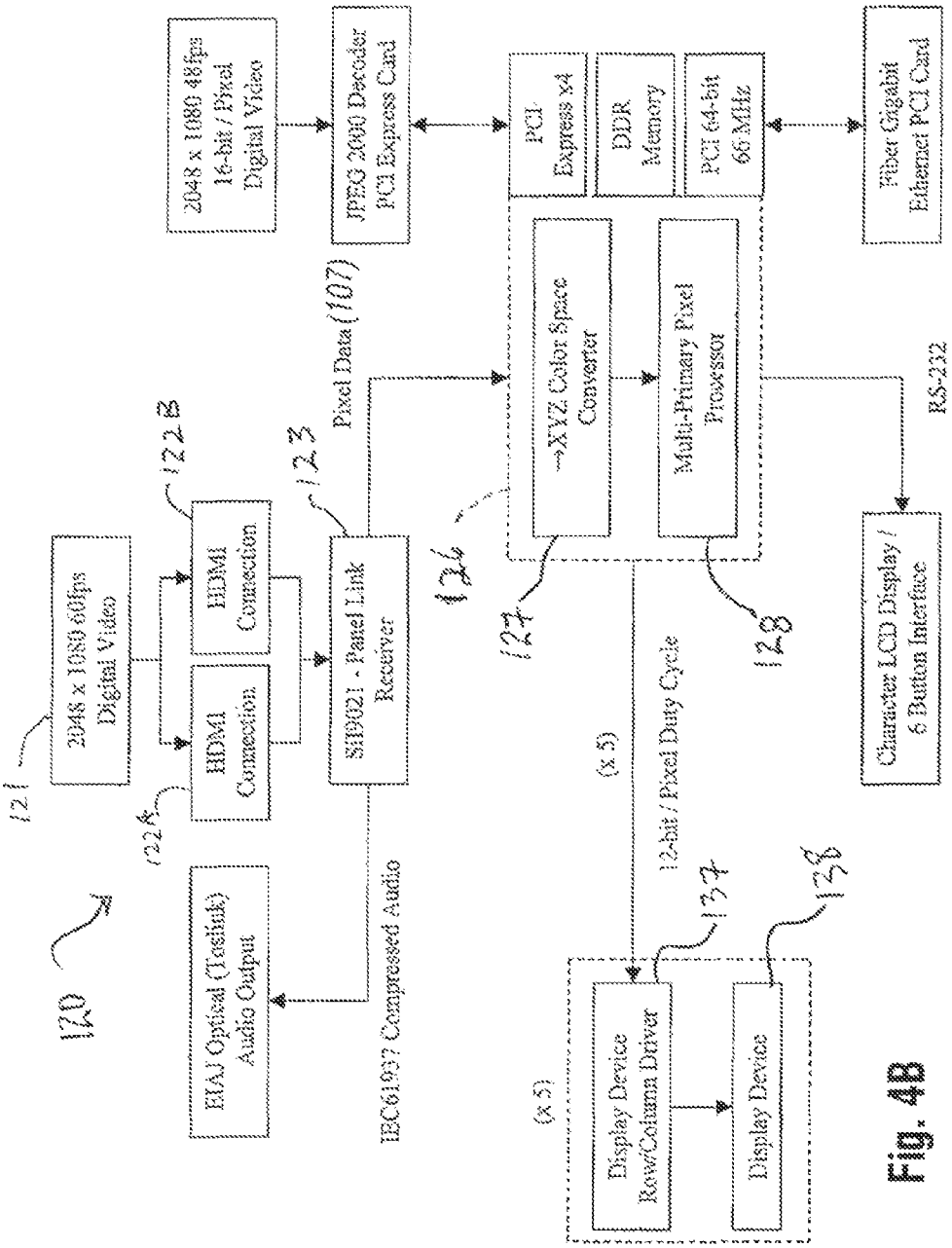
120
121
2048 x 1080 60fps Digital Video
122A
HDMI Connection
122B
HDMI Connection
123
SiI9021 - Panel Link Receiver
IEC61937 Compressed Audio
EIAJ Optical (Toslink) Audio Output
Pixel Data (107)
2048 x 1080 48fps 16-bit / Pixel Digital Video
JPEG 2000 Decoder PCI Express Card
124
PCI Express x4
DDR Memory
PCI 64-bit 66 MHz
XYZ Color Space Converter
Multi-Primary Pixel Processor
127
128
Fiber Gigabit Ethernet PCI Card
RS-232
Character LCD Display / 6 Button Interface
(x 5)
12-bit / Pixel Duty Cycle
132
138
(x 5)
Display Device Row/Column Driver
Display Device

Fig. 4B

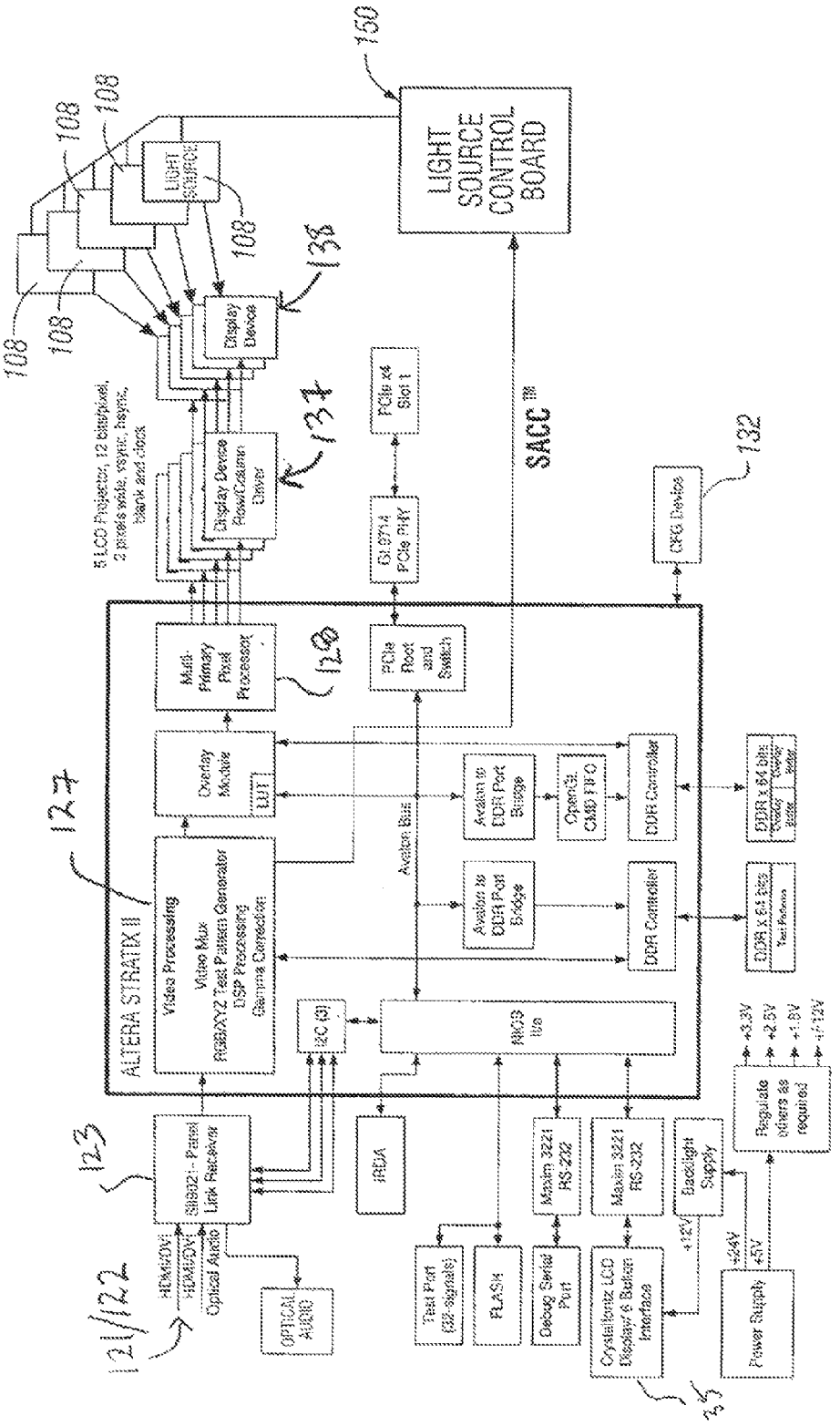
LIGHT SOURCE CONTROL BOARD
150
108
LIGHT SOURCE
Display Device
138
Display Device Row/Column Driver
137
5 LCD Projector, 12 bits/pixel, 2 pixels wide, vsync, hsync, blank and clock
PCIe x4 Slot 1
GL9714 PCIe PHY
SACC™
CFG Device
132
Multi-Primary Pixel Processor
129
PCIe Root and Switch
Overlay Module
LUT
Avalon to DDR Port Bridge
OpenGL CMD FIFO
DDR Controller
DDR x 64 bits
Avalon Bus
127
ALTERA STRATIX II
Video Processing
Video Mux
RGB/XYZ Test Pattern Generator
DSP Processing
Gamma Correction
I2C (3)
NIOS IIe
123
SIS021 - Panel Link Receiver
HDMI/DVI
Optical Audio
121/122
OPTICAL AUDIO
IRDA
Test Port (32-signals)
FLASH
Debug Serial Port
Maxim 3221 RS-232
Crystalfontz LCD Display/ 6 Button Interface
135
Backlight Supply
+12V
+24V
+5V
Power Supply
Regulate others as required
+3.3V
+2.5V
+1.8V
+/-12V

Fig. 5A

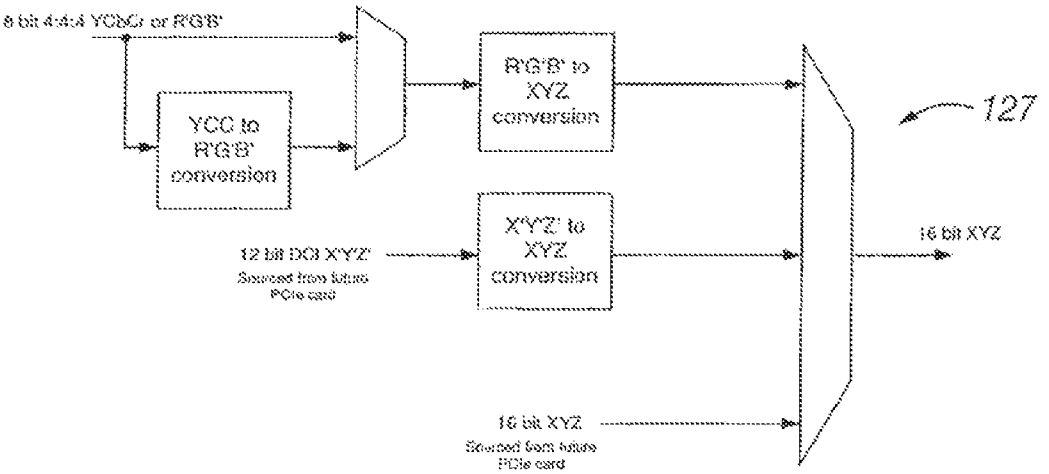
8 bit 4:4:4 YCbCr or R'G'B'
YCC to R'G'B' conversion
R'G'B' to XYZ conversion
127
12 bit DCI X'Y'Z'
Sourced from future PCIe card
X'Y'Z' to XYZ conversion
16 bit XYZ
16 bit XYZ
Sourced from future PCIe card

Fig. 5B

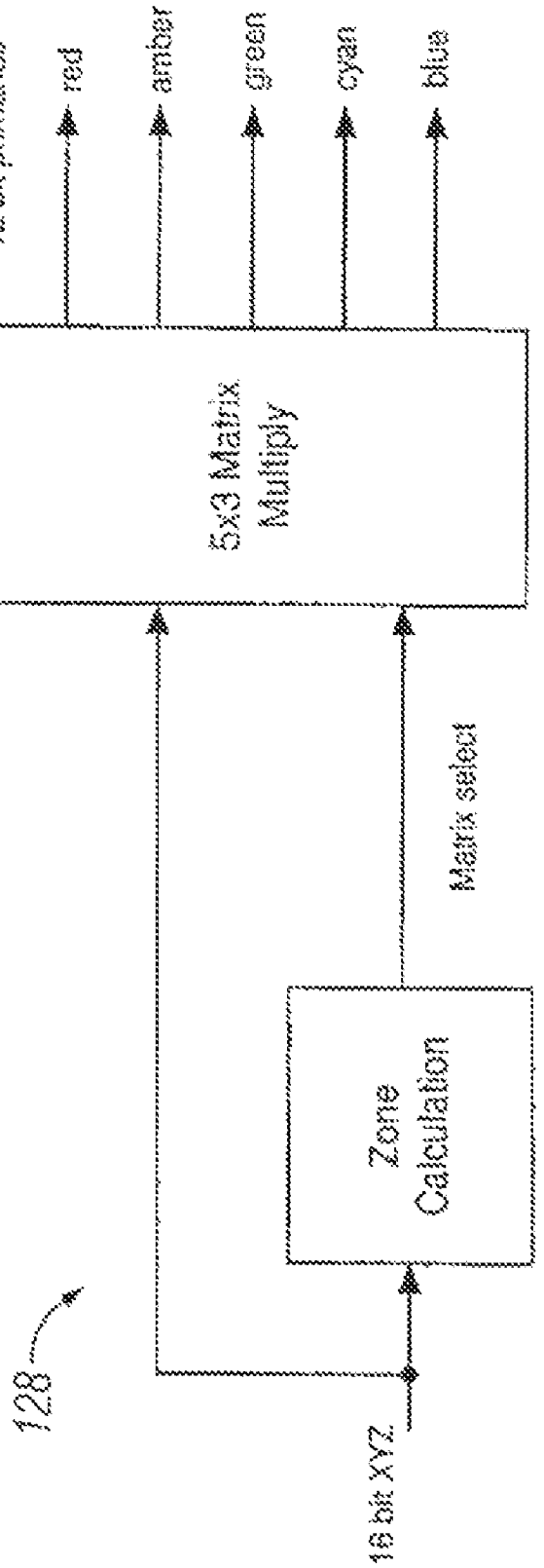
12 bit primaries
red
amber
green
cyan
blue
5x3 Matrix Multiply
Matrix select
Zone Calculation
128
16 bit XYZ

Fig. 5C

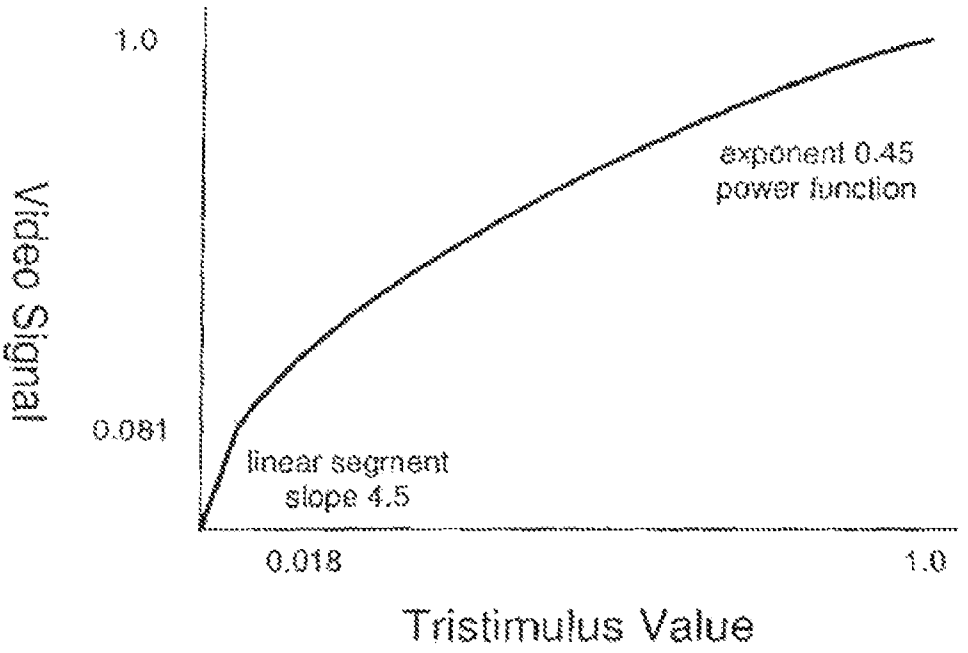
1.0
0.081
Video Signal
exponent 0.45
power function
linear segment
slope 4.5
0.018
1.0
Tristimulus Value

Fig. 5D

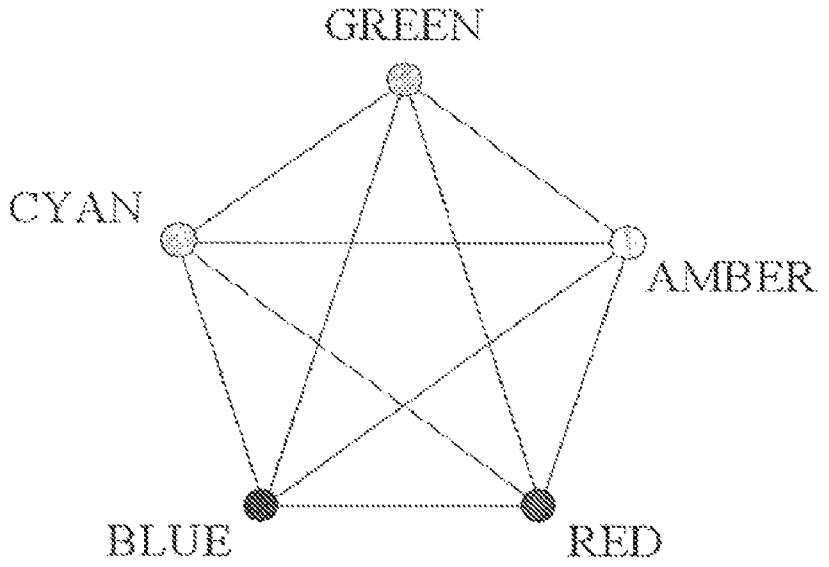
GREEN
CYAN
AMBER
BLUE
RED

FIG. 5E

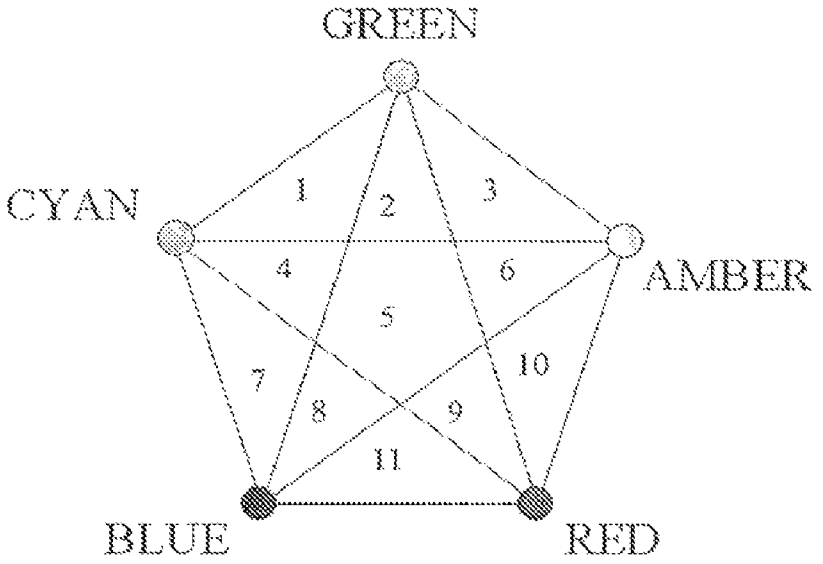
GREEN
CYAN
AMBER
BLUE
RED
1
2
3
4
5
6
7
8
9
10
11

FIG. 5F

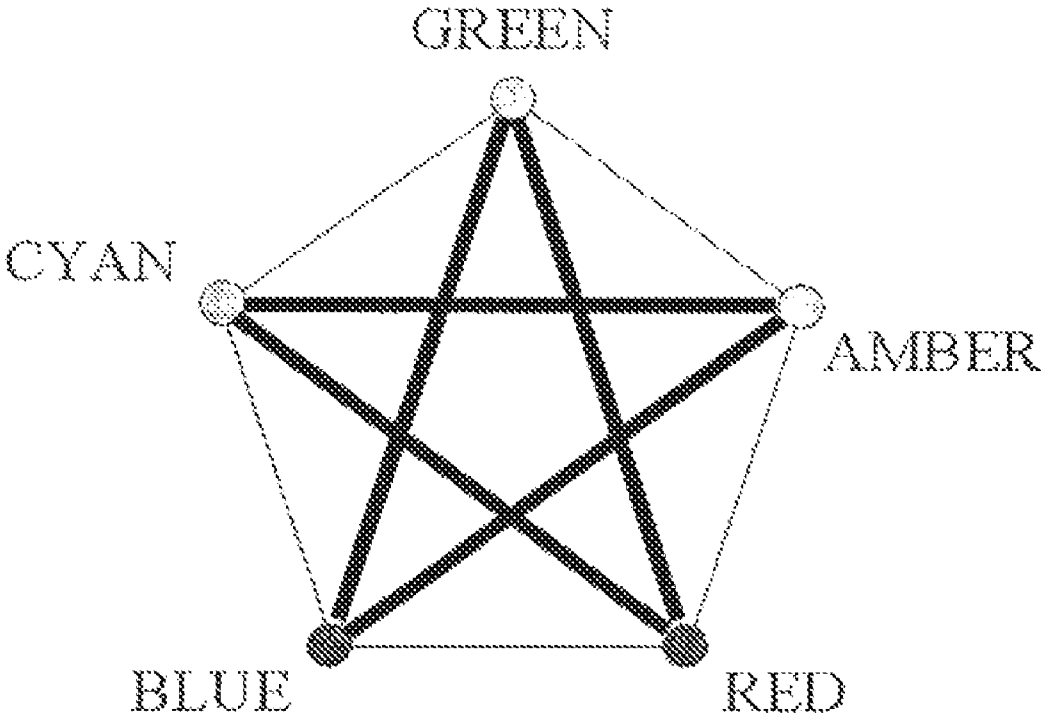

FIG. 5G

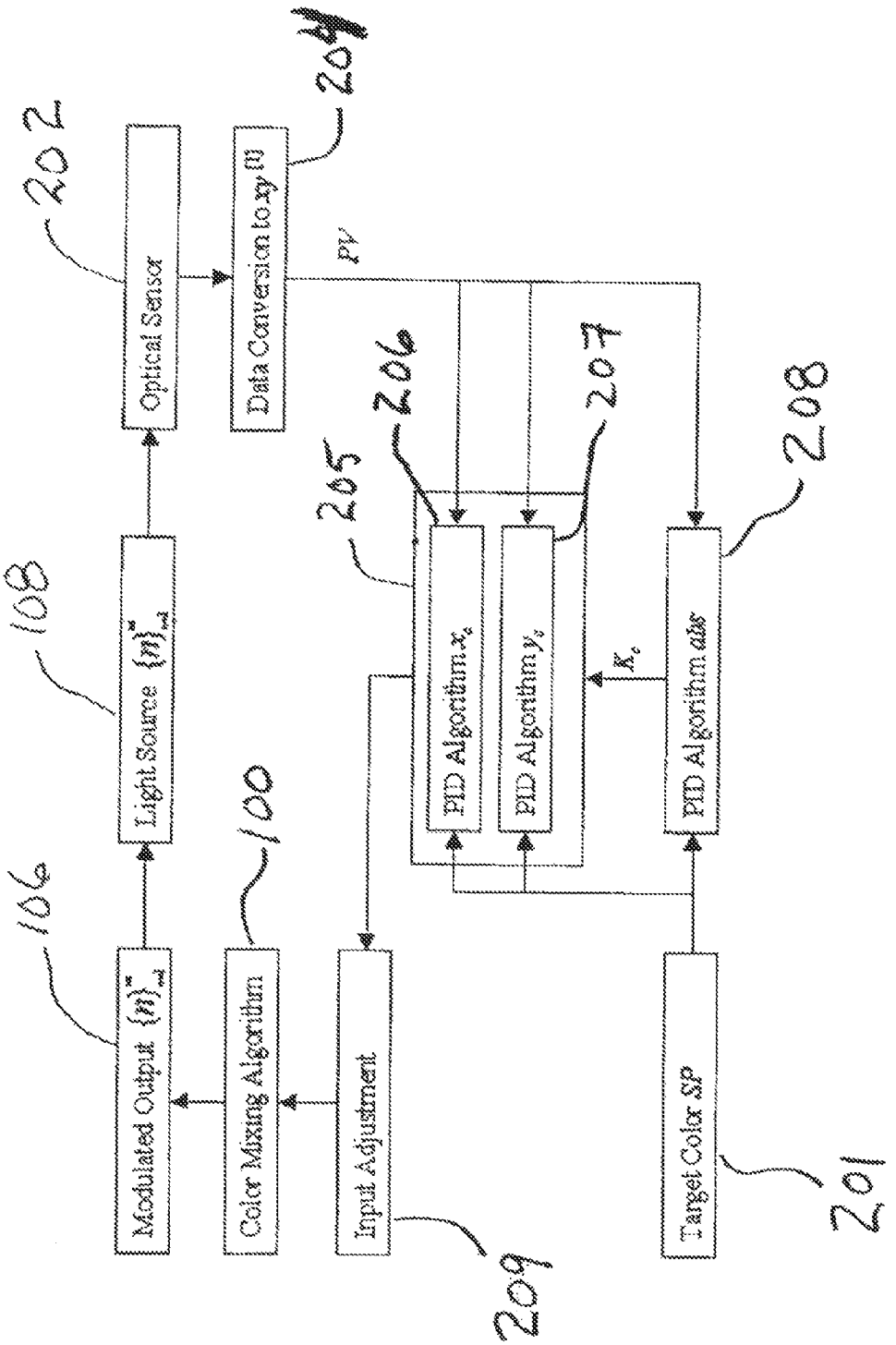
Modulated Output $\{n\}_{i=1}^{m}$
106
Light Source $\{n\}_{i=1}^{m}$
108
Optical Sensor
202
Data Conversion to $xy^{[1]}$
204
PV
Color Mixing Algorithm
100
Input Adjustment
209
PID Algorithm x_c
205
PID Algorithm y_c
206
PID Algorithm abs
207
K_c
208
Target Color SP
201

Fig. 6A

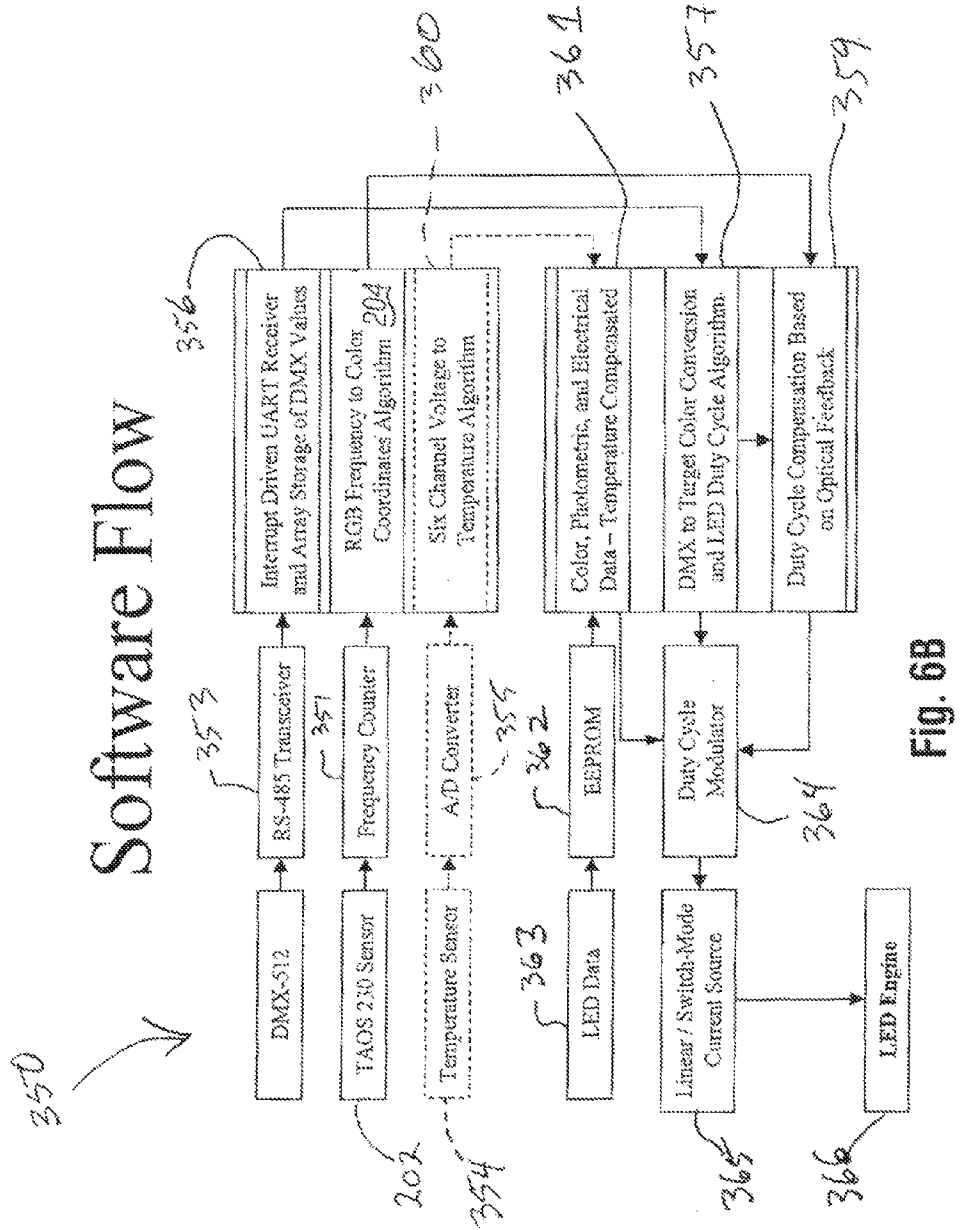
Software Flow
350
DMX-512
TAOS 230 Sensor
Temperature Sensor
LED Data
Linear / Switch-Mode Current Source
LED Engine
RS-485 Transceiver
Frequency Counter
A/D Converter
EEPROM
Duty Cycle Modulator
Interrupt Driven UART Receiver and Array Storage of DMX Values
RGB Frequency to Color Coordinates Algorithm 204
Six Channel Voltage to Temperature Algorithm
Color, Photometric, and Electrical Data – Temperature Compensated
DMX to Target Color Conversion and LED Duty Cycle Algorithm
Duty Cycle Compensation Based on Optical Feedback
353
351
355
362
363
364
365
366
202
354
356
360
361
357
359

Fig. 6B

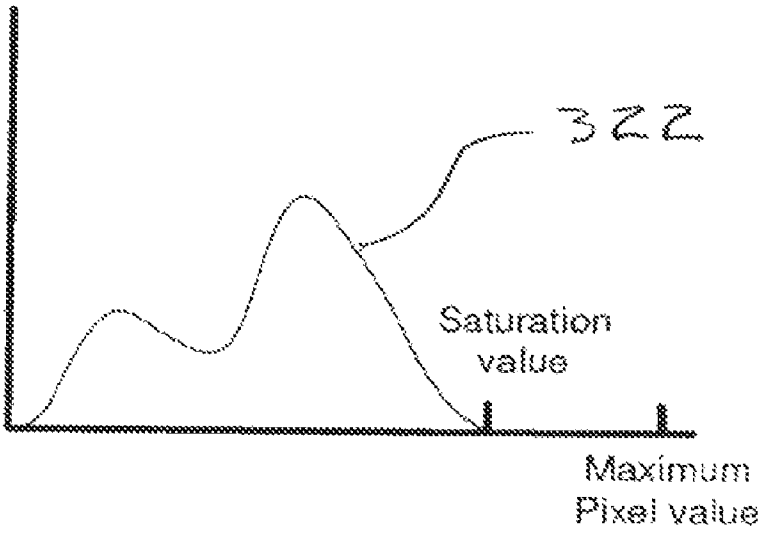
322
Saturation value
Maximum Pixel value

Fig. 7A

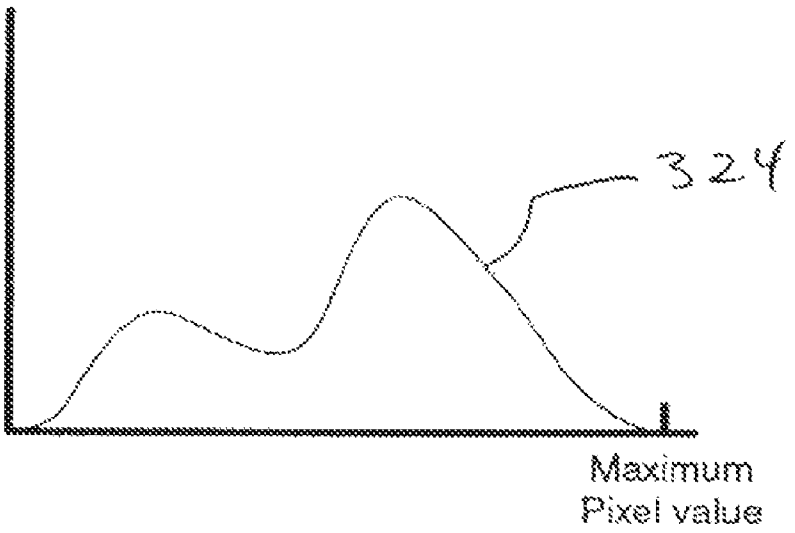
324
Maximum Pixel value

Fig. 7B

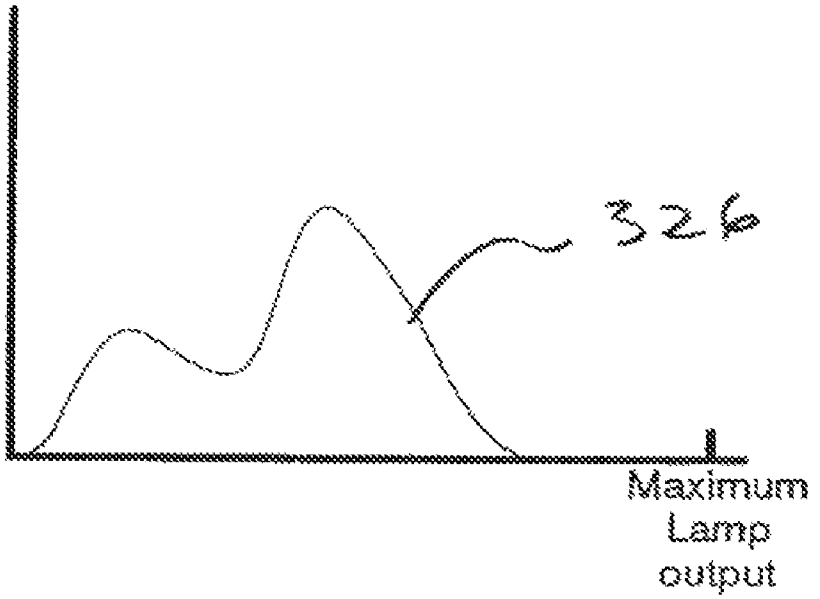

Fig. 7C

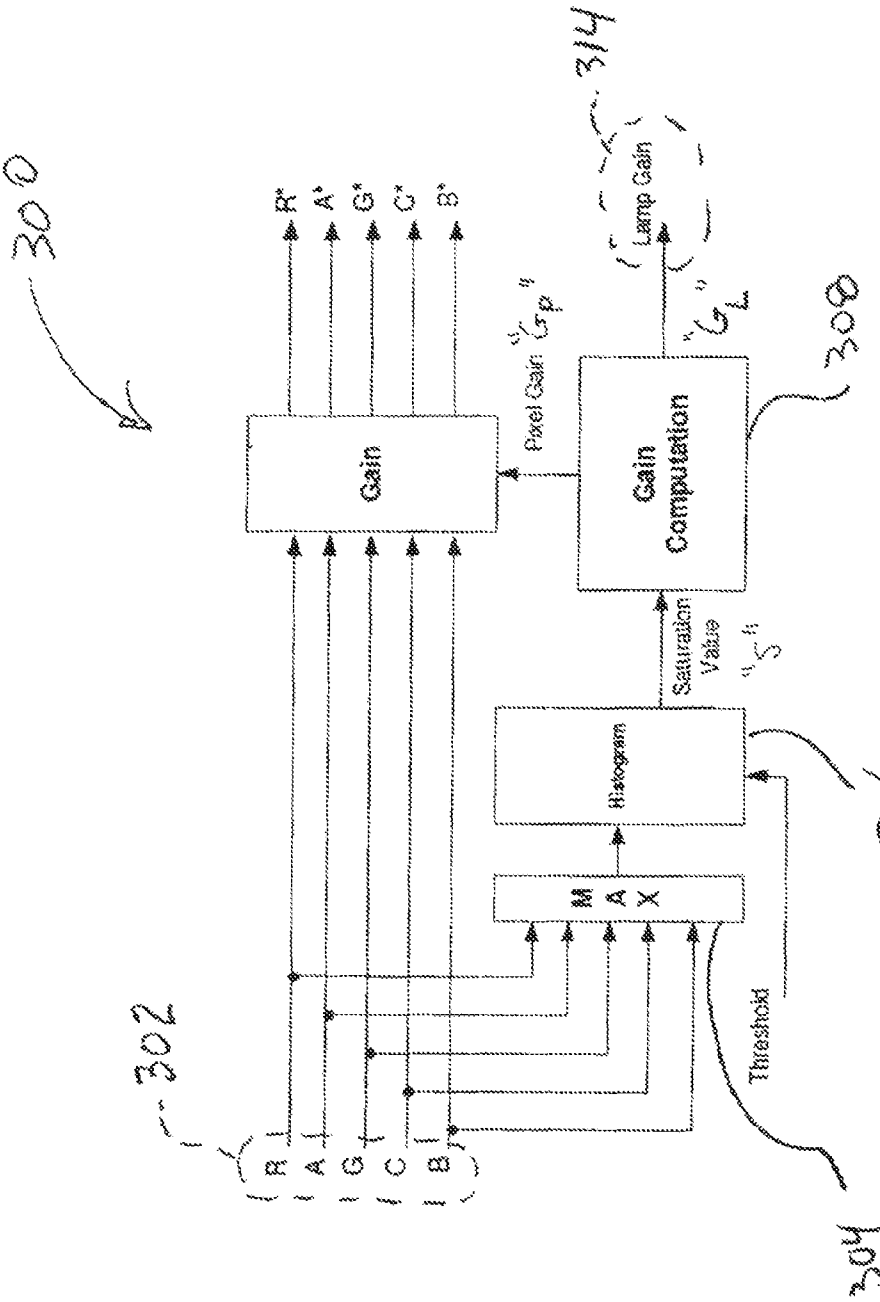
300
R' A' G' C' B'
Gain
Pixel Gain "Gp"
314
Lamp Gain
"GL"
308
Gain Computation
Saturation Value "S"
Histogram
306
MAX
Threshold
304
302
R A G C B

Fig. 8

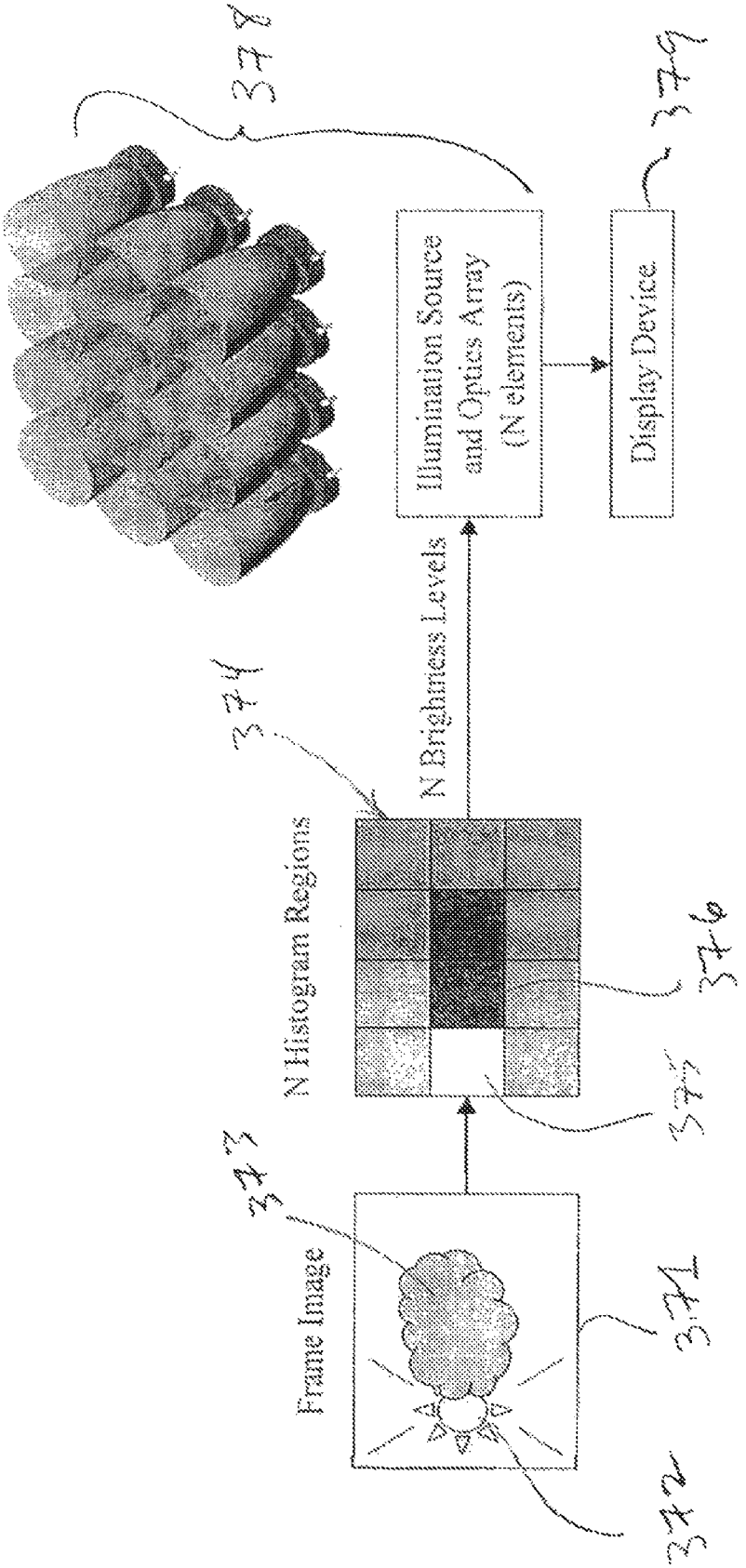
Frame Image
N Histogram Regions
N Brightness Levels
Illumination Source and Optics Array (N elements)
Display Device

FIG. 9

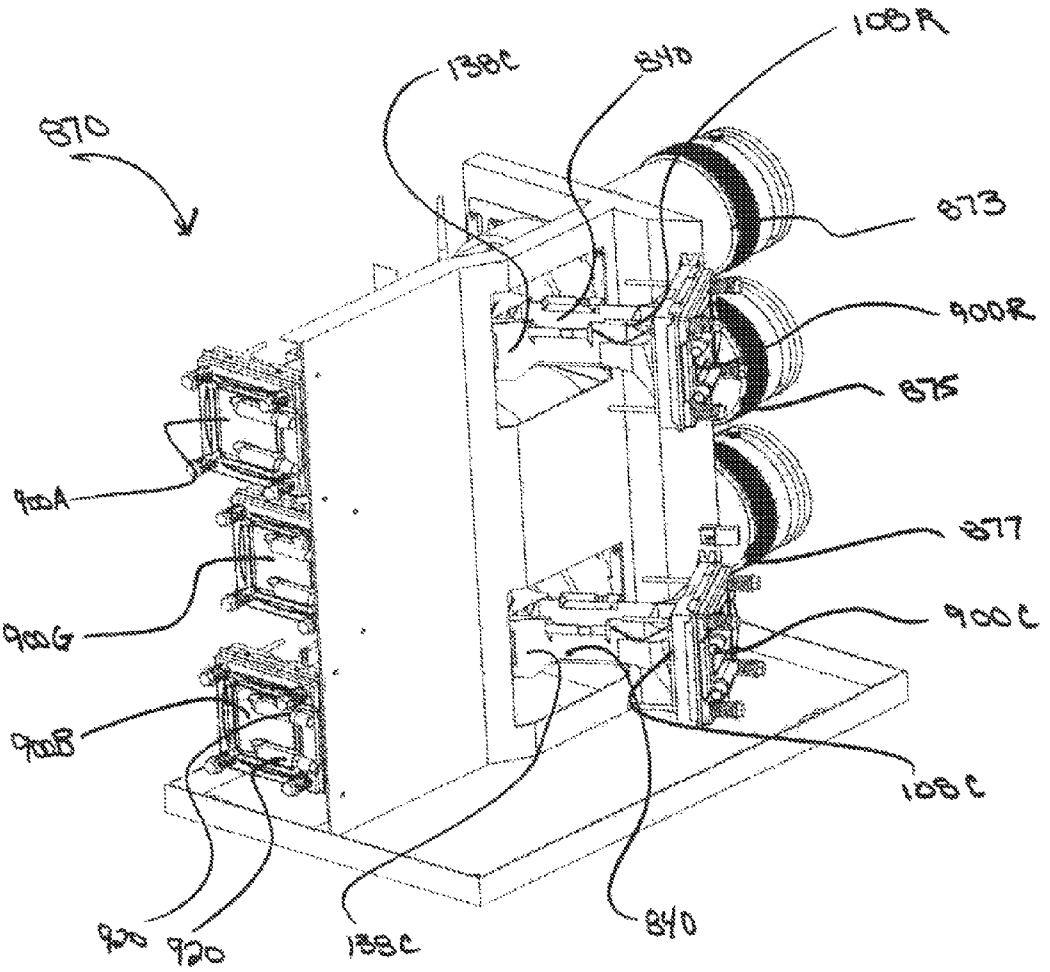
870
138C
810
108R
873
900R
875
900A
877
900C
900B
108C
920
910
138C
810

FIG. 10A

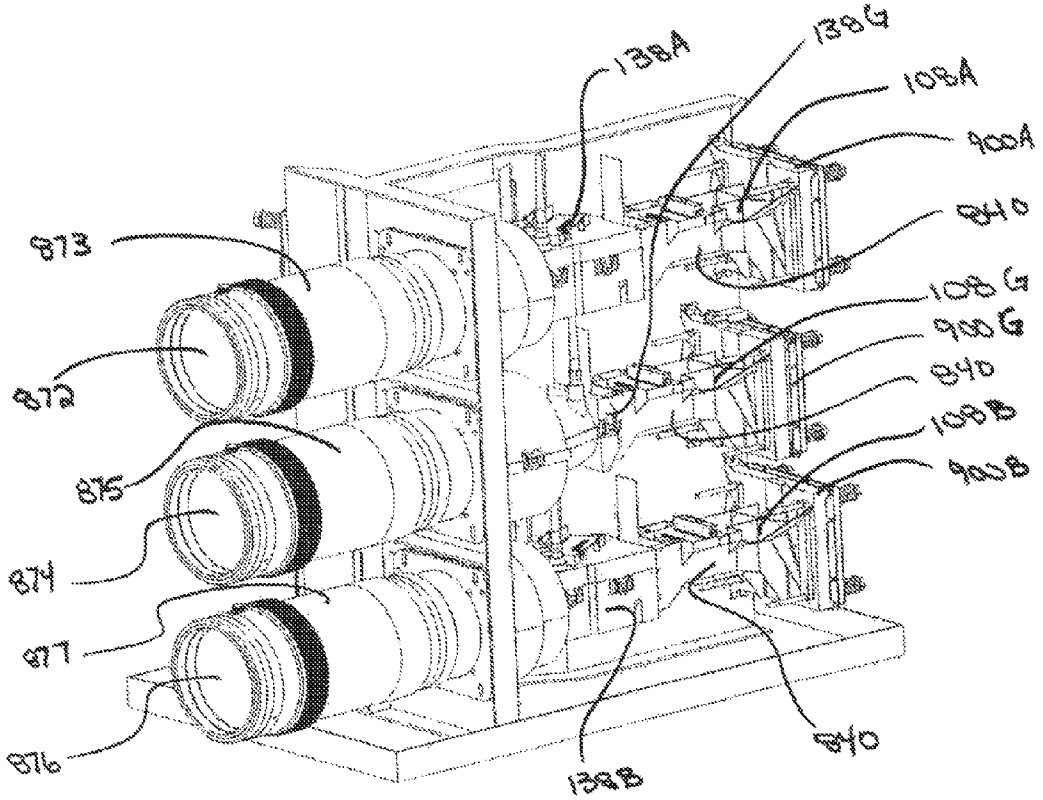
138A
138G
108A
900A
840
873
108G
900G
872
840
108B
875
900B
874
877
876
138B
840

FIG. 10B

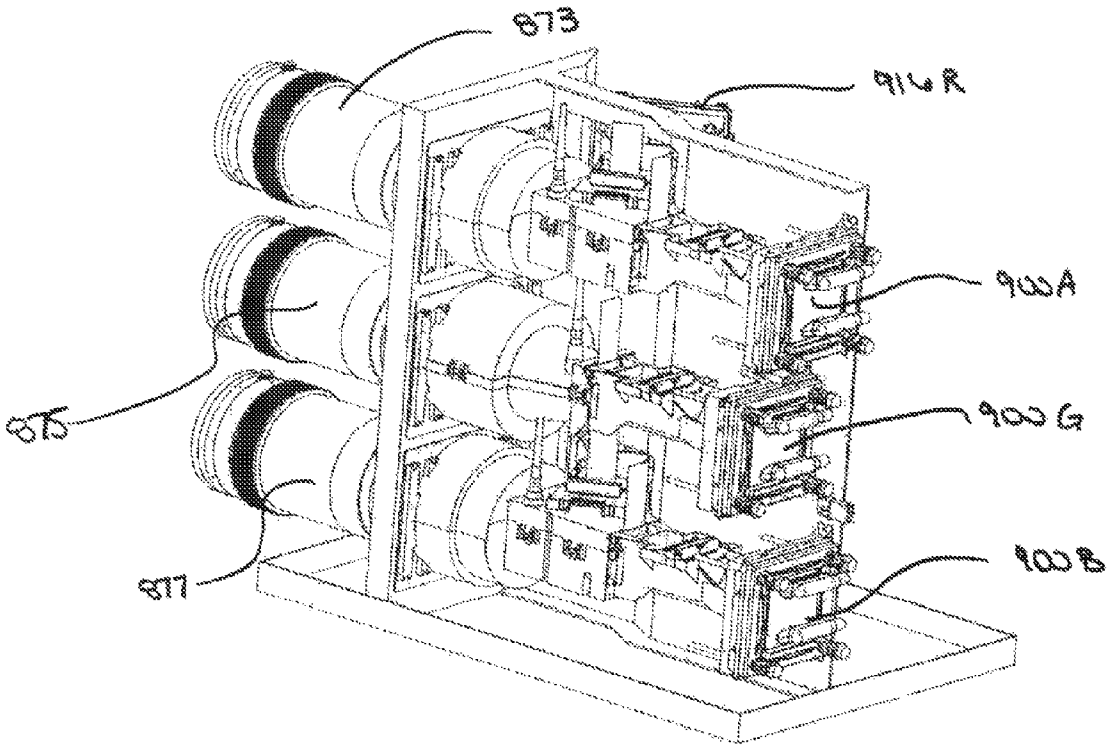

FIG. 10C

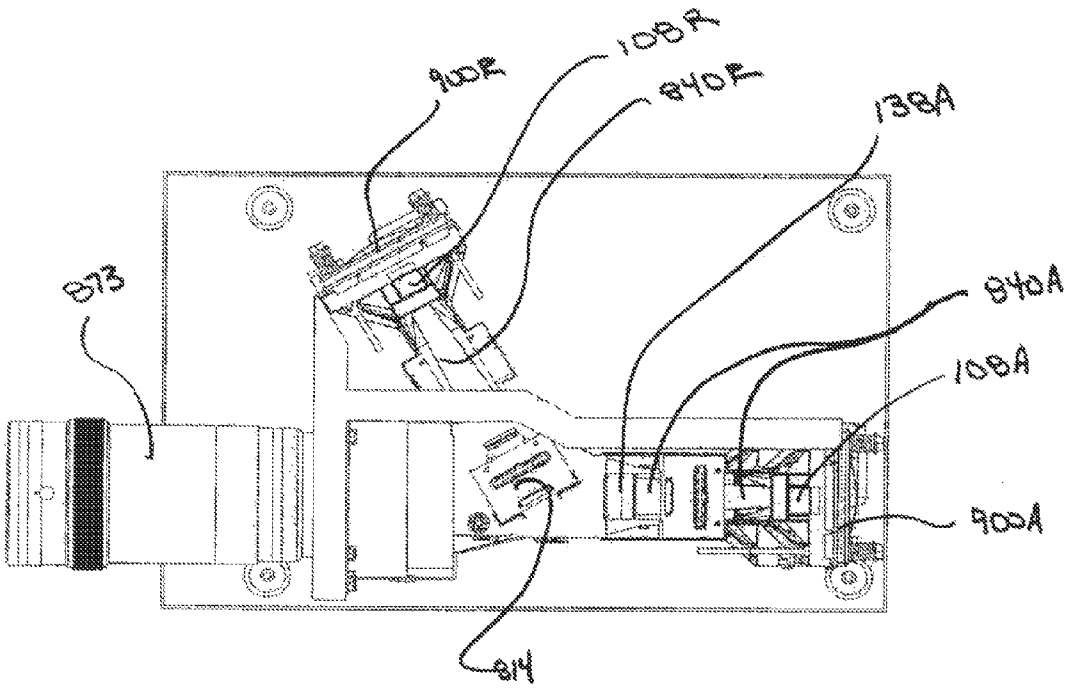

FIG. 10D

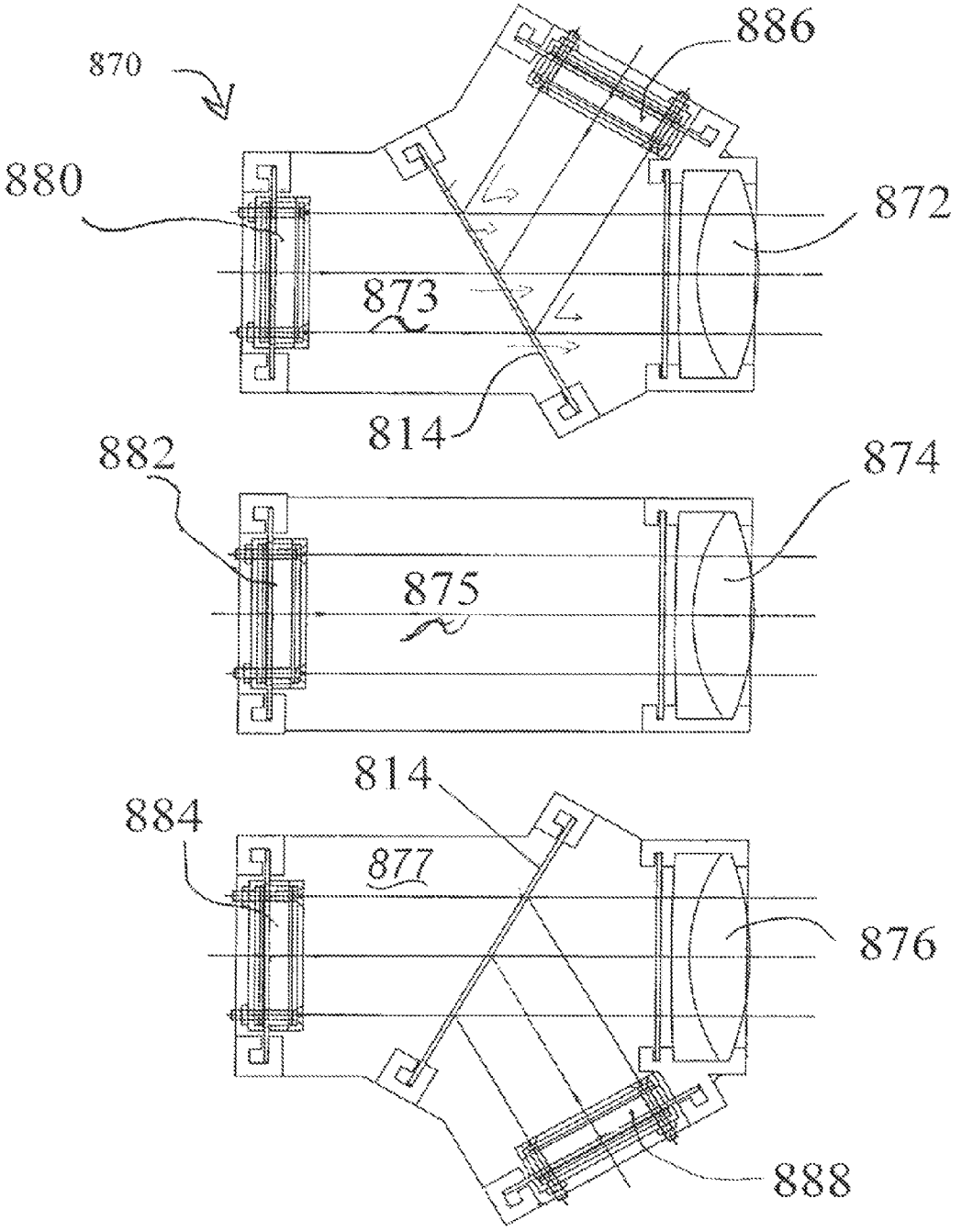

FIG. 11

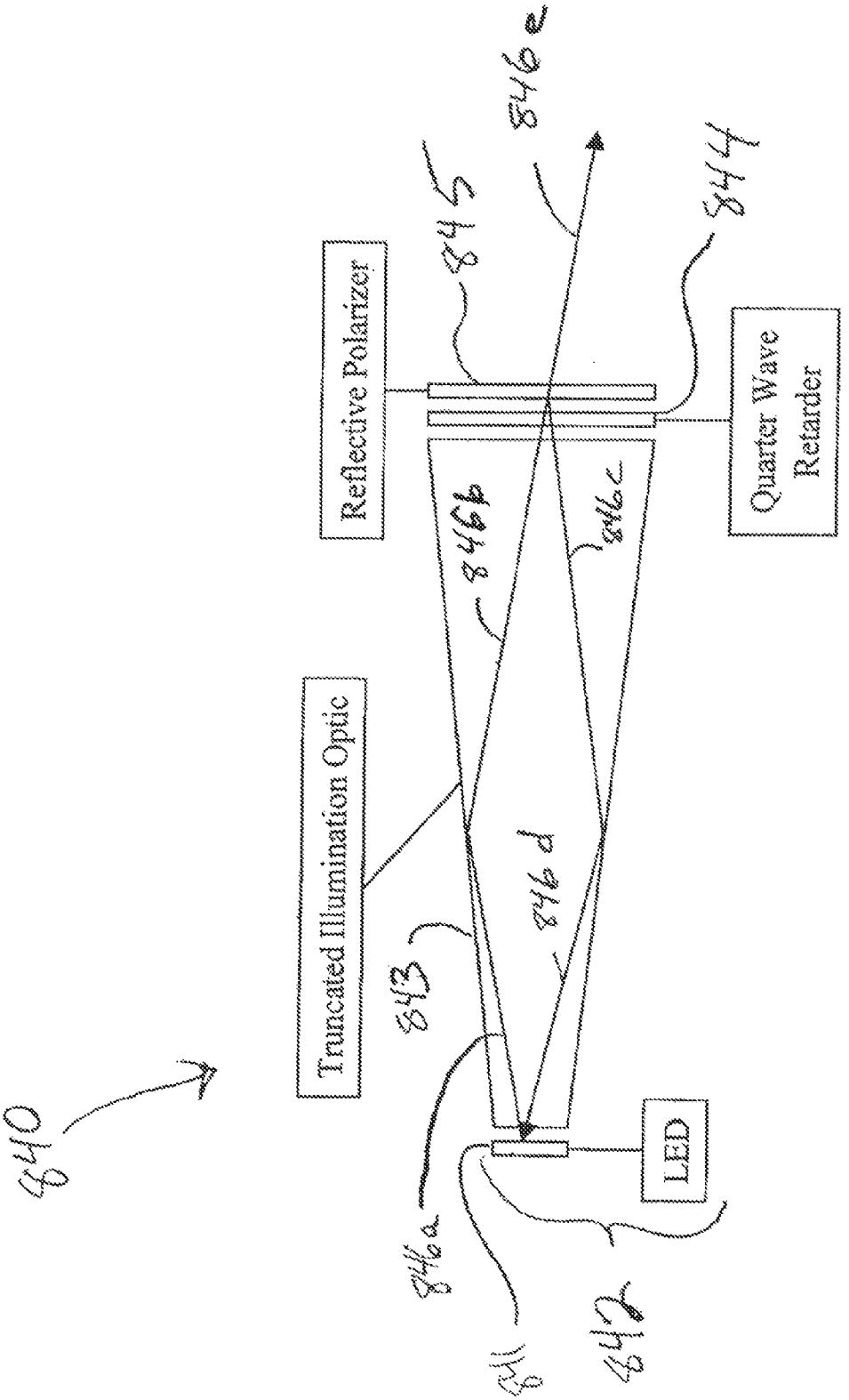
840
Truncated Illumination Optic
Reflective Polarizer
Quarter Wave Retarder
LED
843
844
845
846a
846b
846c
846d
846e
841
842

Fig. 12

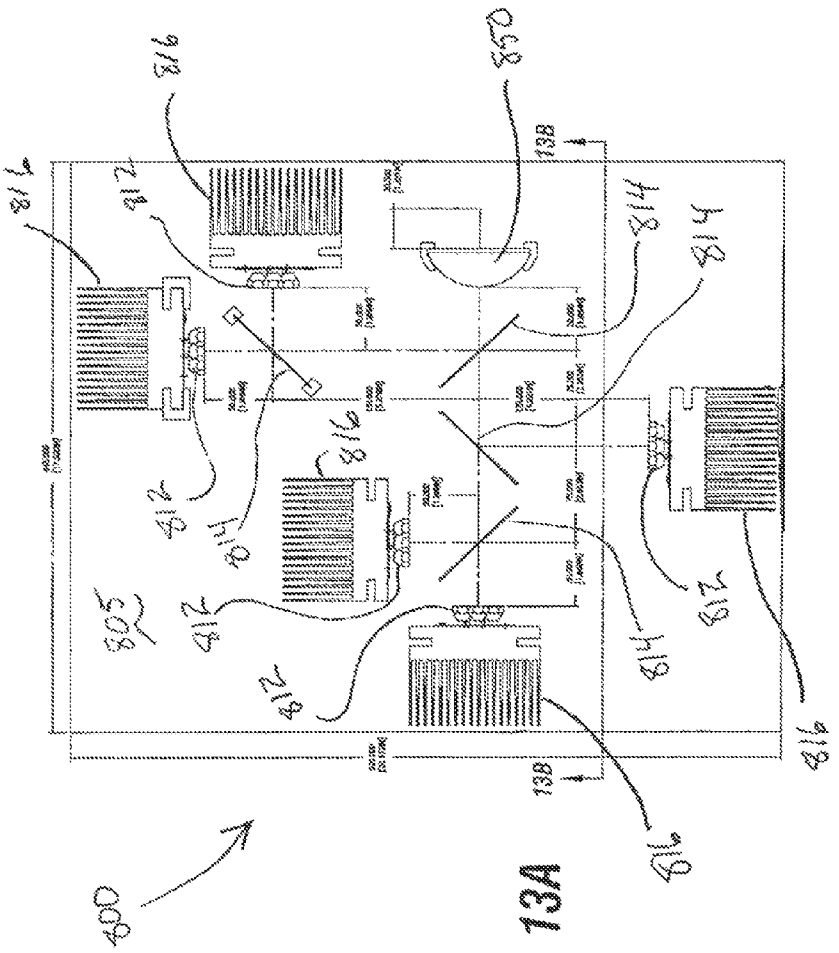
400
713
716
718
805
808
810
812
814
816
818
820
822
824
826
828
830
832
834
836
838
840
842
844
846
848
850
852
854
856
858
860
862
864
866
868
870
872
874
876
878
880
882
884
886

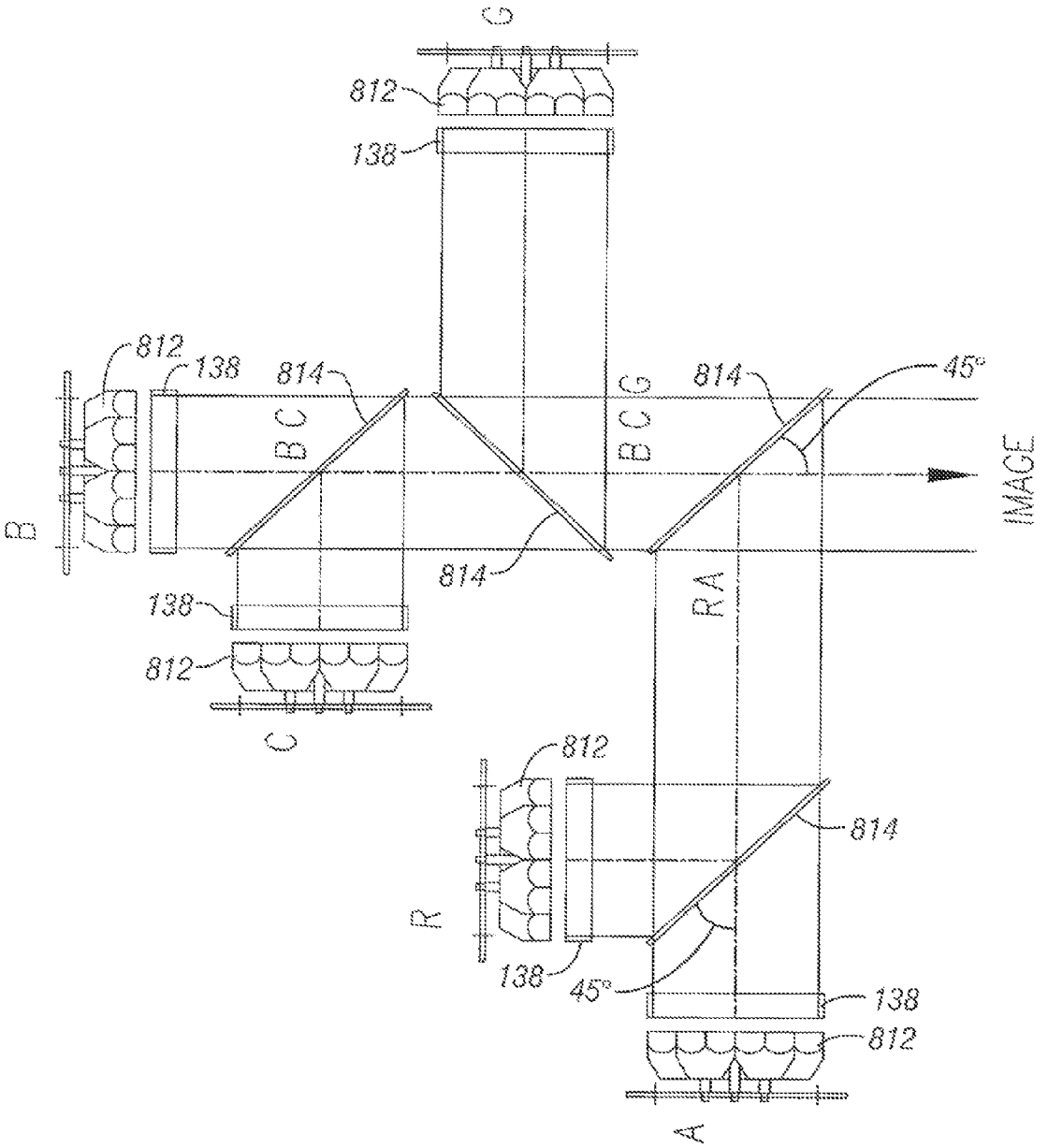
C
812
138
812
138
814
BC
814
BC
45°
IMAGE
B
814
138
812
C
RA
812
814
R
138
45°
138
812
A

FIG. 13C

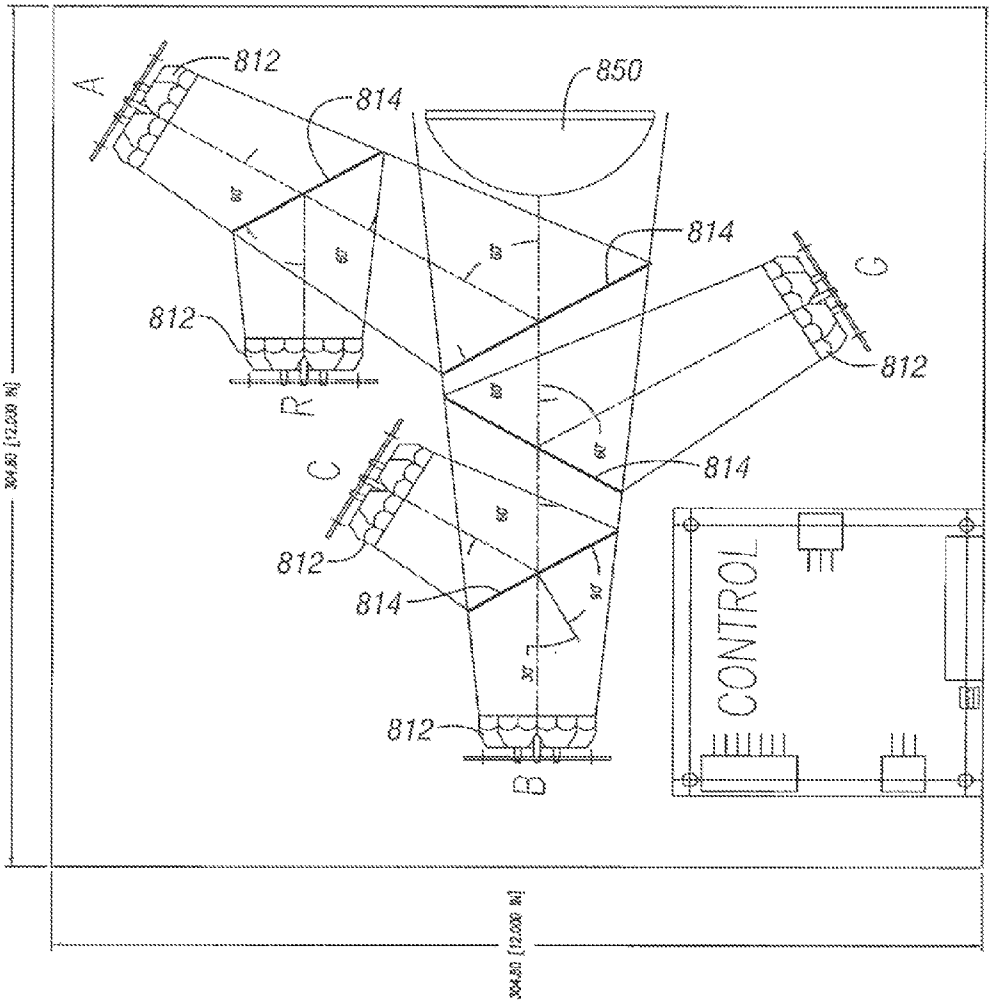

FIG. 14

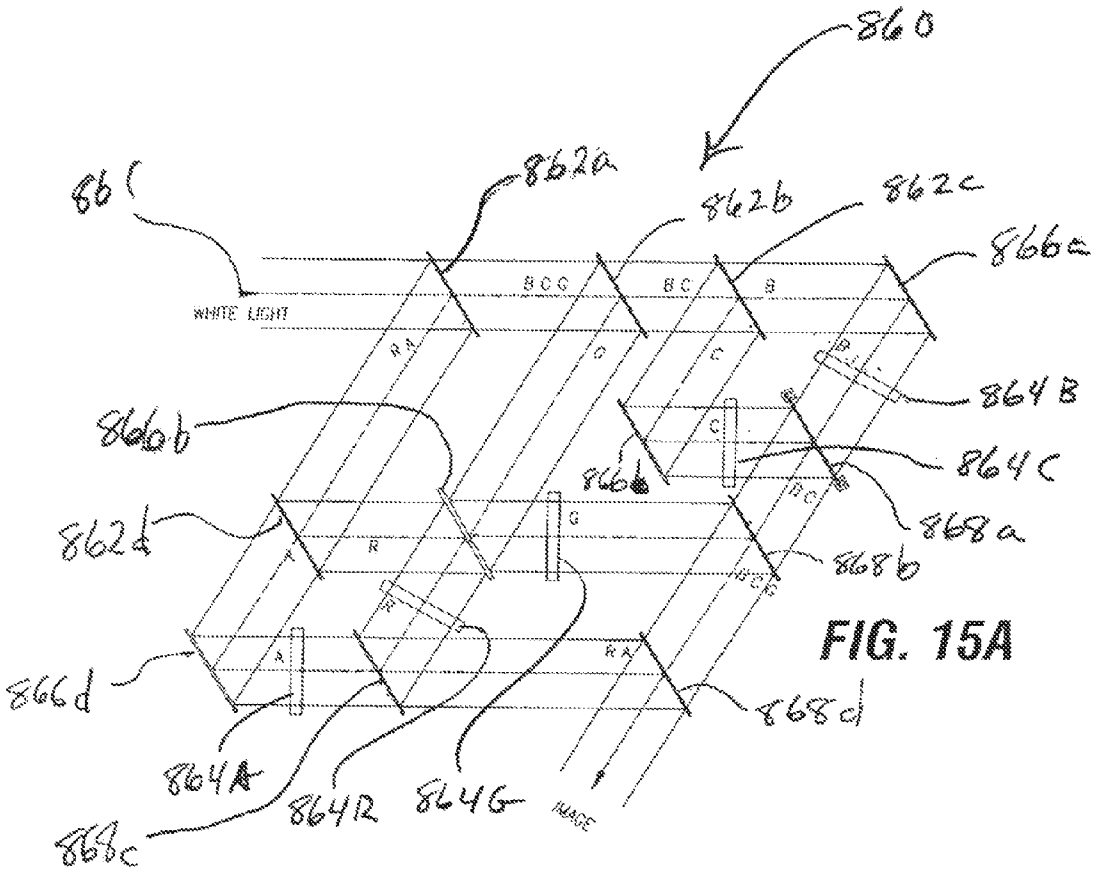

FIG. 15A

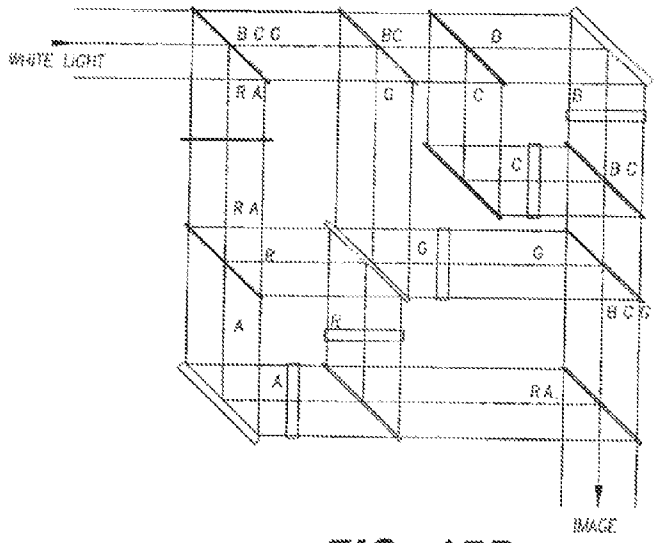

FIG. 15B

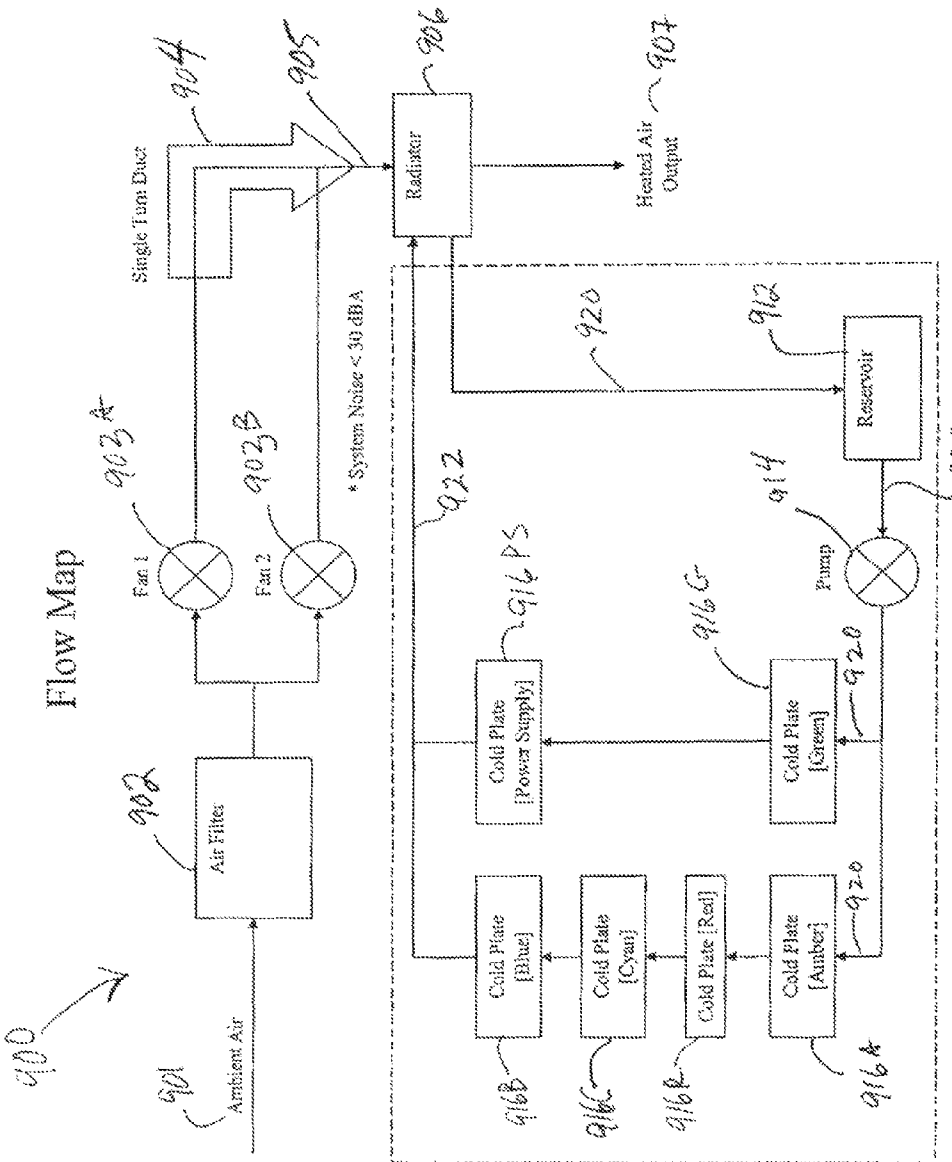
Flow Map
900
901
Ambient Air
902
Air Filter
902A
Fan 1
902B
Fan 2
904
Single Fan Duct
905
* System Noise < 30 dBA
906
Radiator
907
Heated Air Output
912
Reservoir
914
Pump
916A
Cold Plate [Amber]
916B
Cold Plate [Blue]
916C
Cold Plate [Cyan]
916K
Cold Plate [Red]
916G
Cold Plate [Green]
916PS
Cold Plate [Power Supply]
920
920
920
920
922
920

FIG. 16A

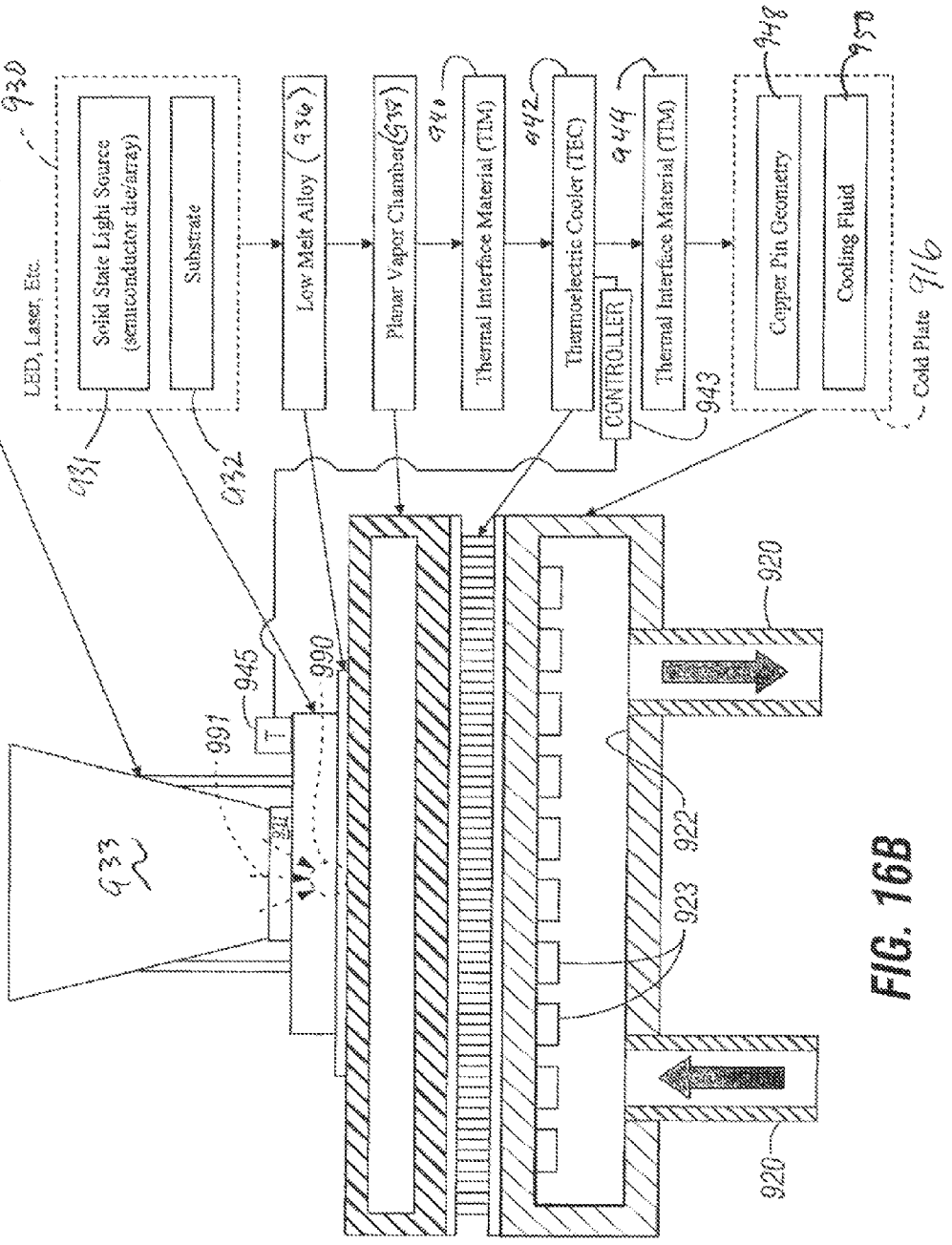
Truncated Illumination Optic (933)
930
LED, Laser, Etc.
Solid State Light Source (semiconductor die/array)
Substrate
931
932
Low Melt Alloy (936)
Planar Vapor Chamber (938)
940
Thermal Interface Material (TIM)
942
Thermoelectric Cooler (TEC)
CONTROLLER
943
944
Thermal Interface Material (TIM)
948
Copper Pin Geometry
950
Cooling Fluid
Cold Plate
916
933
945
T
990
991
920
922
923
920

FIG. 16B

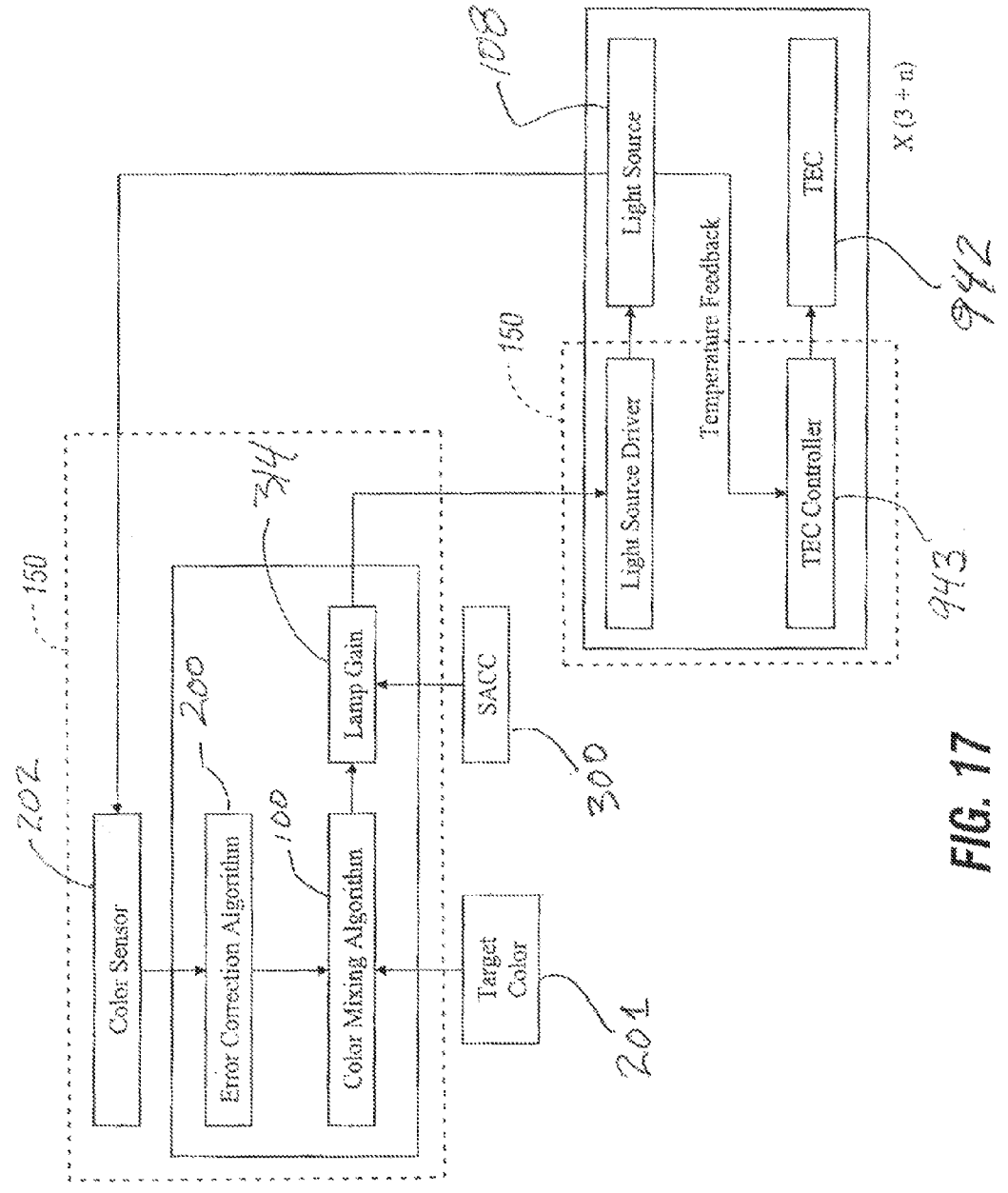
Color Sensor
Error Correction Algorithm
Color Mixing Algorithm
Lamp Gain
SACC
Target Color
Light Source Driver
Light Source
TEC Controller
TEC
Temperature Feedback
X (3 + n)
150
150
202
200
100
344
300
201
108
942
943

FIG. 17

APPARATUS, METHODS, AND SYSTEMS FOR MULTI-PRIMARY DISPLAY OR PROJECTION

CROSS-REFERENCE TO RELATED APPLICATION

This application claims priority to U.S. Provisional Patent Application No. 60/734,701, filed Nov. 8, 2005, herein incorporated by reference in its entirety.

I. BACKGROUND OF THE INVENTION

A. Field of the Invention

The present invention relates generally to methods and systems of video display or projection and, in particular, to methods, apparatus, and systems of color video signal decoding, manipulation, and display or projection with improved color gamut and brightness. Applications of the invention include, but are not limited to, video display or projection for home or commercial entertainment purposes or architectural lighting.

B. Problems in the Art

Video displays and projectors have advanced significantly in recent years. Presently, digital methods of encoding video are beginning to dominate. A variety of display and projection technologies using digital encoding have emerged.

Existing electronic video devices can be generally divided into two groups: direct view devices and projection devices. An example of a direct view device is a cathode ray tube (CRT). A direct view device will generally have a display screen composed of a plurality of RGB pixels. Each RGB pixel will be comprised of a plurality of sub-pixel elements, which most likely comprise a red sub-pixel element, a green sub-pixel element, and a blue sub-pixel element. The color image is created by the viewer's physiological and mental visual system, which mentally integrates the rapidly changing and vacillating sub-pixels and their spatial neighbors to give a full color impression.

A projection system works differently than a direct view device. A projection system displays an image by projecting light on a viewing screen or surface. Different colors of light can be created in two manners. The first method is to sequentially project separate images using only a single primary color and rapidly showing the same image with a second and then a third primary color. The images are flashed at sufficiently high frequency to give the human eye the impression that a specific color has been generated. This sequential presentation relies upon color combinations recorded by the human mind through temporal integration of the separate primary color images. An issue with the use of the sequential method is that it takes three (or the number of primary colors being used to generate the image) times the number of frames to generate the same images that could be shown with a system that integrated multiple light sources into a single image. The increased frame rate further limits the time in which a pixel can be modulated for primary color contribution control because of the fixed pixel transition time; therefore, the color resolution available decreases. The sequential system does have the benefit of having a simpler optic system. Examples of a sequential system are disclosed in U.S. Pat. Nos. 6,962,414 and 5,448,314 which are incorporated by reference in their entirety herein.

The second type of digital video projection system is a simultaneous display system based upon the concept of projecting light of all primaries (example: the red, green, blue primaries) simultaneously onto a screen. The combination is then used to generate the colors perceived by the human eye. The simultaneous (also called parallel or integrated) system integrates multiple primary light sources and provides an output comprised of an image in a single frame.

A variety of processes for digitally encoding a video signal and decoding it for display or projection have been developed and are well-known. Several approaches include using a Digital Micromirror Device (DMD) (a proprietary technology of Texas Instruments Incorporated, Dallas, Tex. USA), liquid crystal on silicon (LCoS), and liquid crystal display (LCD). Each of these technologies can be used to display an image in a sequential or parallel (integrated) color mode. Typically, these devices include a white light source separated into red, green, and blue illuminating components. The utilization of only three primary colors limits the gamut of displayable colors. The three color primaries are unable to effectively render colors throughout the entire color space the human eye can perceive.

By varying the amount of red, green, and blue light reflected from a surface or projected to a human eye, a limited number of colors in the visible spectrum, as perceived by the human eye, can be approximated.

One known method of encoding three primary colors for subsequent projection of a target color takes pixel data represented in a universal color coordinate system (e.g. XYZ color space), performs a color transform, and parses the result among parallel display devices or sequentially to a single device such that each pixel is represented by the combination of three primaries.

FIG. **2**A generally illustrates the basic process. A conventional video processor **35** is used to encode a portion **31** of an image **30** (e.g. light blue sky from image of yellow flowers and blue sky in FIG. **2**A) by representing a target color (here light blue) for a pixel **34** of the image as a combination of red (R), green (G), and blue (B). In this example of FIG. **2**A, the contributions of primary red and primary green are smaller than primary blue. Thus, the output from video processor **35** would encode the target color to be displayed for that pixel as having the indicated proportional contributions from the blue, red, and green primary sources (RGB values are R=65, G=105, and B=255). Thus, the color reproduced on display device **36** would basically be as close to the light blue of the image as possible. FIG. **2**A indicates diagrammatically video processor **35** could be configured to instruct sequential display of each primary (see reference #**36** where the proportional contribution of blue is T=0, green at T=1, and red at T=2). Processor **35** could also operate the display device in parallel mode (e.g. red **38**R, green **38**G, blue **38**B contribution simultaneous at T=0).

The purpose of this known primary color mixing algorithm is to determine the relative proportions of three given colored light sources, for example Light Emitting Diodes (LEDs), required to produce a target color.

a) CIE Color Space

The light emitted by each source is represented in CIE 2-degree 1931 format, where x and y are the chromaticity coordinates and Y' is the photometric flux. The known quantities are represented as follows:

Primary Color Coordinates:

Given (x_r, y_r, Y'_r), (x_g, y_g, Y'_g), (x_b, y_b, Y'_b)

Target Color Coordinates:

Given (X, Y, Z)

Although the sources are designated as red (sub r), green (sub g), and blue (sub b), it is important to note that other colors can be substituted. The three color points form the

triangle **11**A or gamut (see FIG. **1**A) and those three coordinates, referred to as "primary colors," can be used to create a chromaticity point that is within triangle **11**A.

CIE color space is a widely used mathematical definition of color space (a color model describing the way colors can be represented by multiple color components). It was created in 1931 by the International Standard Body Commission Internationale De l'Eclairage (CIE). The CIE color space is defined by a special set of what are called imaginary primaries, which roughly correspond to red, green, and blue respectively. The chromaticity of the imaginary primaries are the XYZ tristimulus curves plotted at (0,1), (0,0), and (1,0) and are the same as the DCI 3.2.1.5 Encoding Primaries. The primaries are imaginary as they are mathematical creations, meaning their chromaticity would be plotted beyond the domain of what the human eye can perceive.

The chromaticity diagram of FIG. **1**A describes CIE color space **14** in xy space. As seen in FIG. **1**A, it appears as basically a closed horseshoe shape or area (see reference number **14** in FIG. **1**A). The points on the border of the horseshoe (line **10**), known as a spectrum locus, and the xy values corresponding to dominant wavelength excitation, range from approximately 400 nanometers to 780 nanometers, as indicated. The CIE color space **14** defines the range of color, the visible spectrum, which a typical human eye can perceive. Line **12** closes the horseshoe between the extreme monochromatic excitation after the long and short wavelengths. Region **16** of the color space, at which the human eye perceives the color "white", lies within the closed area **14**. All colors discernable by human eyes are inside the closed area **14**. The closed area **14** defines the color gamut of the eye. If excitation is monochromatic, it is placed on the horseshoe border **10** and **12**.

A triangle **11**A with vertices R, G, and B has been superposed on color space **14** of FIG. **1**A; (e.g. RGB points at REC709 standard). Vertices R, G, and B represent the position in color space **14** of primary colors Red, Green, and Blue respectively. Triangle **11**A illustrates one problem with three primary color reproduction. Only hues within triangle **11**A can be reproduced with those three primaries. As can be seen in FIG. **1**A, the area of triangle **11**A is but a fraction of the entire color space **14**.

b) White Point

What is called in the art the white point, denoted by subscript w, is the color that results from the full contribution of all three sources, and may not appear white to the human eye. A proportionality constant (m) is calculated for each source and then used to calculate the (x, y) coordinates of the white point. The photometric flux of the white point is simply the sum of the flux from each source.

$$m_r = (Y'_r / y_r) \quad [1]$$
$$m_g = (Y'_g / y_g)$$
$$m_b = (Y'_b / y_b)$$

$$x_w = \frac{x_r m_r + x_g m_g + x_b m_b}{m_r + m_g + m_b} \quad [2]$$
$$y_w = \frac{y_r m_r + y_g m_g + y_b m_b}{m_r + m_g + m_b}$$
$$Y'_w = Y'_r + Y'_g + Y'_b$$

c) Tri-Stimulus Values

The three light sources and the white point are then translated from CIE 2-degree format into XYZ tri-stimulus values (see FIG. **1**A, ref. no. **18**) using the following equations:

$$X_r = \frac{x_r Y'_r}{y_r} \quad Y_r = Y'_r \quad Z_r = \frac{(1 - x_r - y_r) Y'_r}{y_r} \quad [3]$$
$$X_g = \frac{x_g Y'_g}{y_g} \quad Y_g = Y'_g \quad Z_g = \frac{(1 - x_g - y_g) Y'_g}{y_g}$$
$$X_b = \frac{x_b Y'_b}{y_b} \quad Y_b = Y'_b \quad Z_b = \frac{(1 - x_b - y_b) Y'_b}{y_b}$$
$$X_w = \frac{x_w Y'_w}{y_w} \quad Y_w = Y'_w \quad Z_w = \frac{(1 - x_w - y_w) Y'_w}{y_w}$$

d) Square Matrix

The tri-stimulus values of the three light sources can then be represented as a square matrix. This matrix is inverted and multiplied by the white point to get an array of scaling factors (S). The scaling factors manipulate the matrix of the primaries in order to relate to a reference white point. If the desired white point is not the result of the full contribution of each primary color, then S_r, S_g, and/or S_b will deviate from unity. However, if the reference white is set equal to the full contribution of each primary color, then those values are equal to one.

In the event that the lighting system is being controlled by a communication protocol, which indicates the desired colors in levels of red, green, and blue, then a reference white is needed to maintain the intuitive nature that full red, green, and blue produce white. If the protocol allows the capability of selecting a specific color coordinate, then a reference white is not needed.

$$[S_r \quad S_g \quad S_b] = [X_w \quad Y_w \quad Z_w] \begin{bmatrix} X_r & Y_r & Z_r \\ X_g & Y_g & Z_g \\ X_b & Y_b & Z_b \end{bmatrix}^{-1} \quad [4]$$

$$[M] = \begin{bmatrix} S_r X_r & S_r Y_r & S_r Z_r \\ S_g X_g & S_g Y_g & S_g Z_g \\ S_b X_b & S_b X_b & S_b Z_b \end{bmatrix}$$

$$[R \quad G \quad B] = [X \quad Y \quad Z][M]^{-1}$$

e) Transform Matrix

The scaling factors are multiplied by their respective color coordinates in order to complete the transform matrix (M). The result of the matrix multiplication of the transform by the desired color coordinate [X Y Z] is an array of three values [R G B]. This array represents the relative proportions of each primary required in order to produce the desired color point.

f) Duty Cycle

These values are then scaled to the domain of [0,1] by taking each primary and dividing it by the maximum value in the primary color array.

$$D_r = R/\max(R,G,B) \; D_g = G/\max(R,G,B) \; D_b = B/\max(R,G,B) \quad [5]$$

The result is the required duty cycle (D), which can be implemented using a number of modulation techniques (i.e. Pulse Width Modulation or Pulse Frequency Modulation). Duty cycle is the percent of power that is applied to the light source, which relates to the intensity. A duty cycle with more increments has a finer resolution, which leads to smooth transitions between colors and precision adjustments for error correction algorithms. The duty cycle calculation produces the brightest combination of the primary colors required to make the target color.

The foregoing methodology of color mixing is known in the art. It requires substantial, but manageable, mathematical calculations to operate. However, it is limited to three primary color mixing.

2. Simplified Form

These known three-color mixing calculations described above can be reduced algebraically to a simplified form that accounts for color space conversions.

If the target color is represented by (x_c, y_c), the relative values of the three sources required to make that color are calculated as follows:

$$\text{color} = (x_c, y_c) \quad [6]$$

$$R = -\frac{y_r[x_b(y_c - y_g) + x_c(y_g - y_b) + x_g(y_b - y_c)]}{y_c \cdot Y'_r \cdot [x_b(y_g - y_r) + x_g(y_r - y_b) + x_r(y_b - y_g)]}$$

$$G = \frac{y_g[x_b(y_c - y_r) + x_c(y_r - y_b) + x_r(y_b - y_c)]}{y_c \cdot Y'_g \cdot [x_b(y_g - y_r) + x_g(y_r - y_b) + x_r(y_b - y_g)]}$$

$$B = \frac{y_b[x_c(y_g - y_r) + x_g(y_r - y_c) + x_r(y_c - y_g)]}{y_c \cdot Y'_b \cdot [x_b(y_g - y_r) + x_g(y_r - y_b) + x_r(y_b - y_g)]}$$

$$D_r = R/\max(R, G, B)$$

$$D_g = G/\max(R, G, B)$$

$$D_b = B/\max(R, G, B)$$

Whereas in the first three-color mixing method the target color was given in XYZ coordinates, this simplified method uses only xyY' coordinates. The simplified equations assume that the reference white is the full contribution of each of the primary sources, so S_r, S_b, and S_g are all equal to one.

The above-described known algorithms demonstrate the reduction of a three-primary system and their duty cycles, given a target color coordinate. These algorithms have been used for color calculations of RGB LED mixing systems.

However, in a trichromat system, there is a trade-off between maximizing the color space, achieving saturated color, and being able to produce colors in the outlying areas of the CIE color space (such as pastels or deep purples).

It has been recognized that if more primary colors were added to the system, the gamut size increases and fewer performance compromises may be required. An advantage of a tetrachromat or pentachromat system (with 4 and 5 primaries, respectively) is that the spectral content of the illuminating source renders surfaces to a quality that more closely imitates natural daylight. However, one obstacle to calculating the relative contributions of systems beyond trichromat is that matrix M, discussed above, becomes non-square and is overdetermined. Its inversion, which is required to calculate the required primary contribution, is not deterministically solvable with traditional methods. Methods such as pseudo-inverse using the Moore-Penrose Method could be attempted, but would provide only a least-squares fit of a sampling of the final target colors desired. The inherent approximation of the pseudoinverse calculation introduces error into an already highly complex system. The complexities stem from many sources including degradation of output with time, temperature response characteristics, and manufacturing variability. The compound effect of real-world variation and the best-fit calculations would result in the defeat of the primary objective of accurate, repeatable color.

Thus, with the three-color mixing algorithms described above, the primary values matrix cannot simply be expanded to accommodate more colors because it then becomes an unsolvable non-square matrix. In a tetrachromat or pentachromat system, the algorithm must be applied several times.

U.S. Pat. No. 6,633,302 ("the '302 patent") recognizes the limitation on gamut utilizing only three primary sources. It purports to offer an improvement over the same. The '302 patent discloses a static display system that utilizes a cumbersome three -dimensional approach to integrating at least four primaries. This cumbersome approach represents the color space **14** in three dimensional XYZ volumes instead of two-dimensional CE slices. In an attempt to streamline its process, the '302 patent discloses a lookup table and interpolation calculation for performing the necessary conversion from target pixel color to relative contribution of primaries. However, this approach introduces another form of estimation or approximation (including the interpolation calculation) which, in turn, introduces potential inaccuracies into the calculation of the combination of the primary sources. Thus, the '302 system is an inadequate video projection system, especially in light of the present stringent requirements of the high definition digital cinema market.

Therefore, there is room for and a real need for improvement to the state of the art. In particular, there is a need for a color mixing methodology, which allows efficient calculation of target color in color space from four or more colors.

Additionally, many of the existing technologies utilize an incandescent or gas discharge light source. As is well known in the art, such light sources have inherent variations and limitations, such as size, longevity, and durability. The broad spectrum nature of conventional light sources limits the efficiency of saturated primary production because of the filtering required. Superior display characteristics are not solely a function of accurate color reproduction, but also of the brightness and consistency of the light source. Therefore, there is also a need in the art for alternatives and improvements in light sources used for light projection.

II. SUMMARY OF THE INVENTION

It is therefore a primary object, feature, advantage and/or aspect of the present invention to provide apparatus, methods, and systems for multi-primary display or projection, which improve over the problems and deficiencies in the art.

Further objects, features, advantages, and/or aspects of the present invention include apparatus, methods, or systems for multi-primary display or projection and general illumination which provide one or more of:

a. Efficient and effective color mixing to achieve target colors.
b. Wide color gamut.
c. Enhanced color rendition and more life-like color.
d. High color rendering (e.g. 90+)
e. Accurate color and grayscale.
f. Excellent direct display or projection.
g. High efficiencies for the color white.
h. Consistency of color, even during dimming, and for repeated specific colors.
i. Accurate and repeatable specifiable colors (e.g. 0.004 duv).
j. Low color separation.
k. Relatively low mathematical or processor overhead.
l. A relatively economical system.
m. Customizability.
n. Applicability to different light sources.
o. Applicability to different display or projection methods.
p. Applicability to different color encoding and decoding techniques and protocols.

q. Compensation to account for source variation or degradation.

r. Compensation for temperature or other variables of the display or projection system.

s. Low maintenance.

t. Long lamp life.

u. Robust.

v. Scene Adaptive Contrast Control™ that can be applied to the entire display or particular areas of a display broken up into zones.

w. Implementation of narrow spectrum emission sources in a projection system.

x. Implementation of solid state emission sources in a projection system.

y. A digital projection system having an optical arrangement of multi-primaries constructed with a minimum focus length between the source and the projection lens.

z. Efficient thermal management of high lumen density light sources.

These and other objects, features, advantages, and/or aspects of the present invention will become apparent with reference to the specification and claims herein.

One aspect of the present invention comprises an algorithm for utilizing at least four primary light sources to represent a target color. The algorithm and associated system can be applied to both a natively monochromatic light source or traditional light sources filtered for their colored components. The algorithm can be used for either color sequential or parallel modes of operation. The algorithm takes input pixel data represented in a universal color coordinate system, performs a color transform, and disperses the results among parallel display devices or sequentially to a single device such that each pixel is represented by the combination of four or more primaries. The more primaries, the more points of color that can be created in color space. The result is wider gamut, more accurate, life-like, purer colors. Also, in projection, higher pixel brightness is possible because more light can be put into producing the output of a pixel, so the colors are brighter and more vivid. The more primaries used for the target color, the brighter the color will be.

Another aspect of the invention comprises the optional use of a closed loop optical feedback algorithm to account, correct, or compensate for variation of the primary light sources and an optical path. The feedback algorithm and an accompanying sensor provide a consistent reference white or target color. The feedback system can use an RGB or tristimulus corrected color sensor that feeds input data into three PID (Proportional Integral Derivative) algorithms. The third PID algorithm can perform an auto tuning function. This system can also learn and correct, in essentially real time, the subsequent selection of the same color.

Another aspect of the present invention is the implementation of narrow spectrum emission sources into a projection system. These narrow spectrum emission sources include solid state devices such as light emitting diodes (LEDs) and lasers. The integration of LEDs or lasers into the projection system allows for enhanced color projection. Monochromatic sources eliminate the need for filtering, thus reducing the complexity of the optical system and providing more saturated primaries. LEDs and lasers also have operational lifetimes and output maintenance curves that far exceed conventional light sources. Solid state light sources are receiving generous amounts of research attention, which is reflected by the fact that their efficacy has improved dramatically over the past few years and is forecast to continue to improve. In the future, LEDs and lasers will likely exceed the efficiency of the most advanced incandescent and gas discharge technology known today.

Another aspect of the present invention comprises optional contrast control to provide more dynamic color display. The fast response time of the solid state emission source also allows for modulation of the primary source intensity on a frame-to-frame basis to provide an electronic Scene Adaptive Contrast Control™ that acts as a dynamic iris. The frame-to-frame control is the result of utilizing fast response emission sources in a dynamic range improvement algorithm to enhance the contrast ratio of projected images. A histogram analysis of grayscale in a video image determines the proportions of light and dark colors and grayscale. Light sources projecting the image are increased or reduced in intensity to change the dynamic range of the image, depending on that analysis.

Another aspect of the present invention comprises thermal management of narrow spectrum emission light sources. The present invention utilizes a heat pipe package that physically isolates a working fluid from the outside environment. The heat pipe package maintains a pressure differential across its walls, and enables heat transfers from and into the working fluid. Movement of working fluid creates a thermodynamic system that moves heat from one location near the heat source to another location away from the heat source, thus enabling the compact heat source to be spread over a larger area for improved heat dissipation.

Other aspects of the invention comprise a projection system, which utilizes several optical arrangements to integrate the primary color sources to produce a target pixel color. The projection system could also utilize dichroics to reflect/direct the lights to combine colors and conserve etendue. The projection system allows reduction of distance between the sources and the projection optics for a four or more color projection system, to minimize light loss.

III. BRIEF DESCRIPTION OF THE DRAWINGS

FIG. **1**A is a graphical representation of prior art CIE color space with a conventional, state of the art, three primary color area triangle superposed on it.

FIG. **1**B is a graphical representation of prior art CIE color space with a four primary color area, according to one exemplary embodiment of the present invention, superposed on the CIE color space.

FIG. **1**C is a graphical representation of prior art CIE color space with a five primary color area, according to another exemplary embodiment of the present invention, superposed on the CIE color space.

FIG. **2**A is a diagram illustrating prior art processing and display of a color image using three primary color sources RGB.

FIG. **2**B is a diagram like FIG. **2**A but illustrating, at a high level, processing and display of a color image using four or more color sources P_1, P_2, P_3, and P_4, according to one aspect of the present invention.

FIG. **3**A is an idealized illustration of a four primary color area of FIG. **1**B of CIE color space divided into plural triangles by lines between vertices.

FIG. **3**B is an idealized illustration of a five primary color area of FIG. **1**C of CIE color space divided into plural triangles by lines between vertices.

FIG. **4**A is a flow chart of a color mixing algorithm according to one exemplary embodiment and aspect of the present invention.

FIG. **4**B is a block diagram of one example of an implementation of the algorithm of FIG. **4**A.

FIGS. **5**A-G are illustrations of an alternative color mixing methodology similar to that of FIG. **4**A.

FIG. **6**A is a block diagram of an error correction algorithm and system according to an exemplary embodiment and aspect of the present invention.

FIG. **6**B is a software flow diagram for an implementation of the error correction algorithm of FIG. **6**A, showing additional optional compensation methods.

FIG. **7**A is an RAGCB Pixel Histogram illustrating a scene, which makes use of less than full dynamic range of a display.

FIG. **7**B is a Gain Modified RAGCB Pixel Histogram of FIG. **7**A, where the image is stretched over the entire range.

FIG. **7**C is a Projected RAGCB Intensity Histogram of FIG. **7**B with grayscale of the light source decreased by the reciprocal of pixel gain.

FIG. **8** is a block diagram of a Scene Adaptive Contrast Control™ or SACC™, according to an aspect of the present invention.

FIG. **9** is an illustration of an alternative concept regarding SACC™.

FIGS. **10**A-D are an exemplary embodiment of a color mixing projector utilizing five color sources with 30°/60° dichroic mirrors to create a three lens output.

FIG. **11** is an enlarged sectional view of portions of FIG. **10**A.

FIG. **12** is an isolated diagrammatic view of an optional truncated illumination optic with reflective polarizer and quarter wave retarder that can be used for an individual LED light source.

FIG. **13**A is a top plan view of a projector system using an optic system according to one aspect of the present invention, in particular utilizing five different color sources with a combination of dichroic mirrors at 45° to beam path to create a combined output through a single lens.

FIG. **13**B is an elevation view taken along line **13**B-**13**B of FIG. **13**A.

FIG. **13**C is a simplified isolated view of the optics of FIGS. **13**A and B.

FIG. **14** is an alternative embodiment for a five color source single lens projector.

FIGS. **15**A and B are alternative views of a still further embodiment of a five color source, single lens projector using a white light source input.

FIG. **16**A is a flow map of an active thermal management option for solid state light sources such as FIG. **13**A.

FIG. **16**B is a diagrammatic elevation view of a cold plate assembly that could be used with the method of FIG. **16**A.

FIG. **17** is a high level block diagram of an exemplary embodiment which includes several different aspects according to the invention.

IV. DETAILED DESCRIPTION OF EXEMPLARY EMBODIMENTS OF THE PRESENT INVENTION

A. Overview

For a better understanding of the aspects of the present invention, exemplary embodiments will now be described in detail. It is not intended that the present invention be limited to the described embodiment. It is intended that the invention cover all modifications and alterations obvious to those skilled in the art, which may be included within the scope of the invention and its aspects, which are defined solely by the appended claims.

B. Color Mixing Algorithm

The algorithm takes well-known display technology and enhances the user's experience by representing the image with more than three primaries. The two main advantages of a multi-primary image system are a wider color gamut and brighter colors, both because more primaries are used.

FIG. **2**B illustrates the exemplary embodiment. Contrary to the previously described prior art method of FIG. **2**A, the exemplary embodiment of FIG. **2**B encodes the target color for the pixel using at least four primary colors (here four, namely, red **38**R, blue **38**B, green **38**G and amber **38**A to represent a pixel **34** from a maize colored tulip in the image **30**). The color mixing algorithm thus has more primaries to characterize the target color, and thus a wider gamut of color for better, more accurate color rendition. An example of a video encoding protocol is high definition multimedia interface (HDMI) video input, but the algorithm is applicable to most, if not all, video inputs.

The algorithm also promotes uniformity of how the colors look each time they appear. The human eye perceives subtle differences in color. This can affect not only the clarity but the enjoyment of such things as TV and movie projection, and also architectural, theatrical, and other lighting.

1. Color Mixing Algorithm Example 1—Tetrachromat System (Colors RBGA)

The color mixing algorithm of this exemplary embodiment is implemented with the following general method steps:

1. The three (XYZ) primary color encoded video signal is processed and color pixel array data extracted.
2. The color mixing algorithm transforms individual pixel data into an array that represents four or more primaries that would display the target color.
3. Primary color data is parsed to display devices or sequentially to a single device.

A projected image is displayed with a larger color gamut and more authentic color representation than an RGB system.

In a three-color system such as described in the Background of the Invention, the primaries form one triangle **11**A in the CIE color space **14** with vertices RGB (see FIG. **1**A). In a four-color or tetrachromat system of the present exemplary embodiment, the primaries (for example, red, amber, green, and blue) form four triangles in color space **14**. The vertices of these triangles are RAG, AGB, GBR, and BRA in FIG. **1**B. FIG. **3**A provides an idealized representation of each of the four triangles relative to their vertices.

FIG. **4**A is a flow chart **100** of an example of a color mixing algorithm according to an exemplary embodiment of the present invention. It implements a computed target color into a projection system that effectively and accurately combines at least four primary light sources using two-dimensional color space and matrix calculations for computing the target color.

Contrary to state of the art three-primary systems, the algorithm **100** adds one or more additional primaries for the representation of a pixel's color. This technology could be applied to natively monochromatic sources or traditional white sources filtered for their colored components. Furthermore, the algorithm is not dependant on a particular display device and works with color sequential or parallel modes of operation.

A challenge to processing four or five colors, instead of three, is the processing overhead of the math needed to do so. For example, with high definition (HD) video, approximately 124.4 million pixels a second need to be processed. Thus, the calculations for each pixel must be done in about 8 nanoseconds (8×10^{-9} second). It is not commercially practical to

utilize expensive and large processors for most video projectors. Therefore, the method was streamlined to reduce computing overhead.

a) Method

(1) Steps **101-103**

It must first be determined whether the target color point is inside each of the four triangles of FIG. **3**A (see reference number **101** in FIG. **4**A). A function *f* is used that determines whether the target point is to the "right" or "left" of each side of triangle RAG, for example. Each vertex has an (x, y) coordinate expressing its location. Point R has the coordinates (x_R,y_R), point A is located at (x_A,y_A), and point G is at (x_G,y_G). The target color point has the coordinates (x_c,y_c). If the results of the functions are uniformly positive or negative, the target point is inside the triangle. If the results are positive for one or two vertices and negative for the other(s), then the point is outside the triangle. Equation 7 defines the calculation for the red-amber-green (RAG) triangle of FIGS. **1**B and **3**A:

$$fRA=(y_c-y_R)*(x_A-x_R)-(x_c-x_R)*(y_A-y_R)$$

$$fGR=(y_c-y_G)*(x_R-x_G)-(x_c-x_G)*(y_R-y_G)$$

$$fAG=(y_c-y_A)*(x_G-x_A)-(x_c-x_A)*(y_G-y_A) \quad [7]$$

(2) Step **104**

Equations 7 are then repeated for the remaining three triangles AGB, GBR, and BRA. If it is determined that the target point lies within a particular triangle, the color mixing algorithm is calculated using the triangle vertices as the three primary colors.

(3) Step **105**

All of the valid primary color results are summed (in this case, all reds would be summed, all ambers, all greens, and all blues). This produces the proportions of the four primary colors required to create the target point. The duty cycles of the primaries are then calculated in order to normalize the proportions to a 0-1 scale. Each of the four total primary results is then divided by the maximum of the four values. In this example, equation 8 defines the duty cycle for red:

$$D_R = \sum_{i=1}^{k} P_{Ri} \quad [8]$$

Where *k* is the number of triangles containing the target.

Note that the method does not require an unspecified number of iterations or a sufficient starting point in order to provide an accurate solution. In other words, in contrast to the well known Moore-Penrose and Newton method, feedback from the previous triangle calculation is not required in order to determine the outcome of the next and the system is completely solvable without the input of a representative sample of desired outputs. The straightforward nature of the method allows for the calculations to be completed within a short period of time with a standard processor.

The result of algorithm **100** is a modulated output **106** that instructs each light source **108** as to its intensity for a given point in time (e.g. for either producing collectively a reference white color or for illumination using a target color, or for instructing pixel data **107** to drive display devices **109** to collectively produce a target color).

b) Apparatus

The above-described method can be implemented in conventional apparatus, which typically would include a programmable digital processor at the heart of a controller board. The light sources and a digital storage medium could be placed on their own separate board or substrate. Data representing the chromaticity characteristics and degradation profile of the primary light sources can be burned onto a digital storage medium (e.g. EEPROM) on the light source board, as opposed to a controller board. The data would be formatted such that it could be married to any controller board and the information would flow seamlessly into the controller's operational algorithm.

2. Color Mixing Algorithm Example 2—Pentachromat System (Colors RBGAC)

The above-described system can be further expanded to include five primary colors. Whereas four primaries created four triangles, five primaries (see FIG. **1**C) form 10 triangles. FIG. **3**B defines each of the vertices of the ten triangles formed in a red-amber-cyan -green-blue (RACGB) primary system.

At this point, the same procedure is followed as for a tetrachromat system. It is first determined whether the target point (x_c,y_c) is within each of the ten triangles. In the generic form of these equations, P_1, P_2, and P_3 are the vertices of the triangle being tested. Each primary has corresponding x,y coordinates in the CIE color space.

Generic Point within Triangle Test

$$fP_1P_2=(y_c-y_{P_1})*(x_{P_2}-x_{P_1})-(x_c-x_{P_1})*(y_{P_2}-y_{P_1})$$

$$fP_3P_1=(y_c-y_{P_3})*(x_{P_1}-x_{P_3})-(x_c-x_{P_3})*(y_{P_1}-y_{P_3})$$

$$fP_2P_3=(y_c-y_{P_2})*(x_{P_3}-x_{P_2})-(x_c-x_{P_2})*(y_{P_3}-y_{P_2}) \quad [9]$$

The color mixing algorithm is run on each triangle that contains the target point. Below is the generic form of the algorithm:

Generic Color Mixing Algorithm

$$\text{color} = (x_c,\ y_c) \quad [10]$$

$$P_1 = \frac{y_{P_1}\left[x_{P_3}(y_c-y_{P_2})+x_c(y_{P_2}-y_{P_3})+x_{P_2}(y_{P_3}-y_c)\right]}{y_c\cdot Y'_{P_1}\cdot\left[\begin{matrix}x_{P_3}(y_{P_2}-y_{P_1})+x_{P_2}(y_{P_1}-y_{P_3})+\\ x_{P_1}(y_{P_3}-y_{P_2})\end{matrix}\right]}$$

$$P_2 = \frac{y_{P_2}\left[x_{P_3}(y_c-y_{P_1})+x_c(y_{P_1}-y_{P_3})+x_{P_1}(y_{P_3}-y_c)\right]}{y_c\cdot Y'_{P_2}\cdot\left[\begin{matrix}x_{P_3}(y_{P_2}-y_{P_1})+x_{P_2}(y_{P_1}-y_{P_3})+\\ x_{P_1}(y_{P_3}-y_{P_2})\end{matrix}\right]}$$

$$P_3 = \frac{y_{P_3}\left[\begin{matrix}x_c(y_{P_2}-y_{P_1})+x_{P_2}(y_{P_1}-y_c)+\\ x_{P_1}(y_c-y_{P_2})\end{matrix}\right]}{y_c\cdot Y'_{P_3}\cdot\left[\begin{matrix}x_{P_3}(y_{P_2}-y_{P_1})+x_{P_2}(y_{P_1}-y_{P_3})+\\ x_{P_1}(y_{P_3}-y_{P_2})\end{matrix}\right]}$$

As in a tetrachromat system, the primary color results are then summed (all reds summed, all ambers, all cyans, all greens, and all blues) to produce the proportion of the five primaries needed to create the target point. The proportions are then normalized to a 0-1 scale by dividing each of the five primary results by the maximum of the five values. In the duty

cycle calculation below, k is the number of triangles containing the target point and n is the first term in the primary array.

Generic Duty Cycle Calculation

$$D_{Pn} = \sum_{i=1}^{k} P_{ni} \quad [11]$$

$$D_{P(n+1)} = \sum_{i=1}^{k} P_{(n+1)i}$$

$$D_{P(n+2)} = \sum_{i=1}^{k} P_{(n+2)i}$$

...

In the equations above, when k=0, the sum must equal zero. Negative results are not summed because they are not within the triangle.

3. Color Mixing Algorithm Example 3—More than Five Colors

This color mixing system could be expanded to more than five colors, and beyond the examples given, using the concepts described. A simple equation calculates the number of triangles that need to be tested for a given number of primary colors. The generic form of this equation determines the number of permutations of n items chosen from a group of m items. For the purposes of color mixing, it must be determined how many triangles (or groups of 3) are formed in an m-color system. The triangles are tested and the algorithm runs exactly as for tetra- and pentachromat systems.

$$C(m, n) = \frac{m!}{(n)!(m-n)!} \quad [12]$$

$$C(m) = \frac{m!}{6(m-3)!}$$

4. Exemplary Implementation of Color Mixing Algorithm

FIG. **4**B is a block diagram illustrating one example of an implementation of a color mixing algorithm like that discussed with respect to FIG. **4**A. FIGS. **5**A-G illustrate additional specifics about such an implementation.

FIG. **17** is a block diagram that places the color mixing algorithm in context of a complete multi-primary illumination system. Color mixing algorithm **100** would receive a target color instruction **201** from input data and generate a lamp gain instruction **314** that would be passed to the driver for each light source **108**. In this manner, color mixing algorithm controls the intensity of light source **108**. It is to be understood that this arrangement would be used for each light source **108**. In the embodiments described herein, there are more than three (3+n) light sources that each have their color controlled by the system of FIG. **17**. The four or more light sources can be used to produce combined illumination (e.g. pure white when all the light sources are combined or any color possible by mixing of the sources). On the other hand, as is well known, each light source **108** could be projected through a display device **137**/**138** (not shown in FIG. **17**, but shown in FIG. **5**A) (e.g. a pixilated light valve such as LCD, LCoS, or DMD) to project a static image or video images. Error correction (see reference numerals **200** and **202**), contrast control (reference numeral **300**), and heat management (reference numerals **942** and **943**) will be discussed in later sections.

This exemplary embodiment is in the context of a high definition (HD) projector using a field programmable gate array (FPGA) chip to provide video processing functions (see generally ref. no. **120**). FIGS. **4**B and **5**A show block diagrams of the same. The device could be implemented in other integrated circuits, such as an ASIC instead of FPGA. As can be appreciated, the embodiment of FIG. **5**A is described in the context of driving LCD's, but could drive any display device.

Input video data is an HDMI compliant video stream decoded by a Silicon Image (Sunnyvale, Calif. USA) type SIL9021CTU-7 decoder chip. Input video will be 1920.times.1080 (1080p) pixels, progressive scan, 60 Hz, 24-bit R'G'B' or Y'CbCr video data. As further discussed, projector **120** will include these features:

1. Programmable Test Pattern Generation
2. Tri-channel programmable Gamma Correction
3. XYZ Color Space Conversion for increased gamut
4. Hardware—what is called a symbology overlay with OpenGL graphics provided by an on-chip NIOS II processor and DDR RAM overlay buffer. The symbology overlay is available from Digital Design Corp., Palatine, Ill. USA.
5. Multi-Primary Pixel Processor for conversion to 5-primary colorspace
6. IRDA port for remote control
7. Interface to Flash memory for multipurpose data storage
8. RS-232 interface to CrystalFontz LCD display w/6 button interface (available from CrystalFontz America, Inc., Spokane Valley, Wash. USA).
9. PCI Express or PCIe core, a well known implementation of the PCI, to allow expandability, such as custom hardware decoding cards.
10. Output to display devices (here 5 LCDs).

The high definition projector (HDP) FPGA **120** will take as input a 1080p 60 Hz video signal **121**/**122** which is sourced from an HDMI decoder IC. It will then perform several video processing tasks, and drive a 5-primary display device projector system (ref. no. **126**) for projection display.

The signal processing chain includes two major blocks, what will be called Color Space Conversion block **127** and XYZ to 5-primary conversion block **128**.

Color Space Conversion block **126** must accept 8 bit/channel 4:4:4 YCbCr or R'G'B' data or 12 bit/channel DCI X'Y'Z' data and generate 16 bit/channel XYZ data at the output. See FIG. **5**B.

XYZ to 5-primary Conversion block **128** accepts the 16 bit/channel XYZ and generates the 12 bit/channel primary control signals. See FIG. **5**C.

Incoming video from Silicon Image decoder IC **123** can be encoded with two possible colorspaces, namely ^{709}Y'Cb'Cr', or Gamma Corrected RGB (R'G'B'). The pixel data will be converted to the XYZ colorspace prior to symbology overlay **139** and 5 primary conversion.

If the incoming video is already R'G'B', this conversion is skipped. If the incoming video is 8-bit ^{709}Y'CbCr, it is first converted to gamma-corrected R'G'B' with Eq. i:

$$\begin{bmatrix} R' \\ G' \\ B' \end{bmatrix} = \begin{bmatrix} 1 & 0 & 1.5748 \\ 1 & -0.187324 & -0.468124 \\ 1 & 1.8556 & 0 \end{bmatrix} \cdot \left(\begin{bmatrix} {}^{709}Y' \\ Cb \\ Cr \end{bmatrix} - \begin{bmatrix} 16 \\ 128 \\ 128 \end{bmatrix} \right) \quad [i]$$

Only a subset of valid ^{709}Y'CbCr codewords fall within 0-255 values in the R'G'B' space after transformation—according to modeling, 75.8% of codewords are out of range. These values can be clipped, however the out of range data can be maintained into the XYZ space and clip the values there in order to preserve maximum accuracy, since some illegal R'G'B' values may fall as legal XYZ values after the conversion process is complete.

Modeling indicates that the possible ranges of the R'G'B' values are:

R'={−202 . . . 455}
G'={−83 . . . 339}
B'={−238 . . . 491}

Therefore, the R'G'B' values can be expressed as signed 10-bit binary (s9) numbers without resorting to clipping, providing a range of +/−512.

Pixel data in the R'G'B' space has been gamma corrected, and this correction must be undone before the values can be converted into the XYZ colorspace. This conversion will be implemented in programmable look up table (LUT) **140** to provide flexibility, and because several different transfer functions are in widespread use. The LUT approach also allows non-linear transfer functions to be expressed easily. For example, the transfer function specified for Rec. 709 (FIG. **5**D) is an exponent of 0.45, with a linear segment of slope 4.5 near the black level to prevent the infinite slope a pure exponential would provide.

Conversion of Rec. 709 RGB to CIE XYZ can be accomplished with the matrix transform in Eq. ii:

$$\begin{bmatrix} X \\ Y \\ Z \end{bmatrix} = \begin{bmatrix} 0.412453 & 0.357580 & 0.180423 \\ 0.212671 & 0.715160 & 0.072169 \\ 0.019334 & 0.119193 & 0.950227 \end{bmatrix} \cdot \begin{bmatrix} R_{709} \\ G_{709} \\ B_{709} \end{bmatrix} \quad \text{[ii]}$$

As described previously, the gamut of the 5-primary color space is defined by the chromaticity coordinates of the five primaries. These points enclose the convex two dimensional space **14** of FIG. **1**C. Additionally, there are ten possible triangular sub-gamuts as shown in FIGS. **3**B and **5**E.

The algorithm for conversion from XYZ color space to the 5-primary color space involves detecting which of the ten sub-gamuts the desired color belongs to. A conversion from XYZ to each 3-primary sub-gamut is calculated and the results are averaged to form the conversion from XYZ to 5-primary space.

In order to reduce the complexity of the hardware, as many calculations as possible must be pre-computed. The color conversion algorithm turns out to be fairly deterministic (it behaves predictably). One difference between the methodology of this exemplary embodiment and that described with respect to FIG. **3**B, is that the gamut is divided into eleven zones, see numbers **1-11** in FIG. **5**F, as opposed to the ten zones of FIG. **3**B.

By determining which of the eleven zones the desired color is in, the associated triangular sub-gamuts are determined. Consequently the conversion matrix from XYZ to 5-primary space can be pre-computed. The details of this are presented below.

A given pixel P (X,Y,Z) must be located within one of the eleven 5-primary gamut zones of FIG. **5**F. In order to determine in which zone the pixel resides, it must first be transformed into the two dimensional CIE chromaticity coordinate space. The location of an incoming pixel in CIE space is determined based on the XYZ colorspace values according to Eq. iii.

$$x = \frac{X}{X+Y+Z} \quad y = \frac{Y}{X+Y+Z} \quad \text{[iii]}$$

Now that the coordinates of the pixel P(x,y) are known, we must also know the coordinates of the 5 primary colors in order to locate the zones. Sample primary coordinates are listed in Table 1 below. These values will be programmable and dependent on the colors of the lamps in the projector.

TABLE 1

xy Coordinates of Primary Colors

	x	y
R_P	0.6990	0.2861
A_P	0.5920	0.4016
G_P	0.2867	0.6866
C_P	0.0590	0.3730
B_P	0.1570	0.0213

The 5-primary gamut is subdivided into zones by five internal lines between the five primary points. These lines are highlighted in FIG. **5**G. We will not be making a determination of whether P(x,y) is out of gamut, therefore the five outside lines will be ignored. We can determine which zone P(x,y) resides in by determining which side of each of the internal lines P(x,y) is on, and then using a LUT to determine the zone. The procedure is as follows:

1) Find vectors which start at the pixel P(x,y), and terminate at each respective primary coordinate. These five vectors now represent the bearing and distance to each of the 5 primary points, and will be referred to as

$$\vec{R}(x,y), \vec{A}(x,y), \vec{G}(x,y), \vec{C}(x,y), \vec{B}(x,y)$$

2) We can now calculate the Determinant (2D cross product) of each pair of vectors corresponding to one of the five internal lines (Eq. iv):

$$D_{BG} = \begin{vmatrix} \vec{B}(x) & \vec{G}(x) \\ \vec{B}(y) & \vec{G}(y) \end{vmatrix} \quad \text{[iv]}$$

$$D_{BA} = \begin{vmatrix} \vec{B}(x) & \vec{Y}(x) \\ \vec{B}(y) & \vec{Y}(y) \end{vmatrix}$$

$$D_{CR} = \begin{vmatrix} \vec{C}(x) & \vec{R}(x) \\ \vec{C}(y) & \vec{R}(y) \end{vmatrix}$$

$$D_{CA} = \begin{vmatrix} \vec{C}(x) & \vec{Y}(x) \\ \vec{C}(y) & \vec{Y}(y) \end{vmatrix}$$

$$D_{GR} = \begin{vmatrix} \vec{G}(x) & \vec{R}(x) \\ \vec{G}(y) & \vec{R}(y) \end{vmatrix}$$

3) The polarity of the five resulting determinants index a lookup table (Table 2) which provides the corresponding zone of P(x,y).

TABLE 2

Zone Determinant Polarity Table (Det polarity)

Zone	D_{BG}	D_{BA}	D_{CR}	D_{CA}	D_{GR}
1	+	+	+	+	−
2	−	+	+	+	−
3	−	+	+	+	+
4	+	+	+	−	−
5	−	+	+	−	−
6	−	+	+	−	+
7	+	+	−	−	−
8	−	+	−	−	−
9	−	−	+	−	−
10	−	−	+	−	+
11	−	−	−	−	−

Once the zone has been determined, one of the eleven pre-computed color conversion matrices is used to generate the drive signals for each of the primaries. The actual conversion multiplies the XYZ vector by the conversion matrix, to generate the 5 element output vector of drive signals. This can be expressed as:

$$\begin{bmatrix} R \\ A \\ G \\ C \\ B \end{bmatrix} = M_k \begin{bmatrix} X \\ Y \\ Z \end{bmatrix} \quad [v]$$

where M_k is 5×3 color conversion matrix, and k is the zone in which this XYZ point lies.

Each of the zones of the gamut consists of an intersection of several triangles whose vertices are three of the five primaries. For example, referring to the zone diagram (diagram 3, below), zone 1 is an intersection of the three triangular sub-gamuts, AGC, GCB and RGC. A complete list of the zones with the intersecting triangles follows:

Diagram 3: 5-Primary Conversion Zones

Zone	Intersecting Triangular Sub-gamuts
1	AGC, GCB, RGC
2	AGC, RBC, RGB
3	RAG, AGC, AGB
4	GCB. ACB. RGC
5	RGB, RAC, AGB, RGC, ACB
6	RAG, RAC, ACB
7	ACB, GCB, RCB
8	RCB, AGB, RGB
9	RGC, RAB, RGB
10	RAG, RAB, RAC
11	RAB, RGB, RCB

To compute the color conversion matrix for each zone, the inverse of the 3×3 matrix made up of the XYZ primaries for each intersecting triangle is computed. These matrices are used to populate the appropriate rows of a set of larger 5×3 matrices with the remaining matrix entries set to zero. This group of 5×3 matrices is then averaged to form the final conversion matrix. The following example for Zone 1 illustrates the computation. The primaries colors are indicated by the triple $X_pY_pZ_p$, where p refers to one of the five primaries: R, A, G, C, B.

Thus, the method uses the following two foundational steps:

a. First compute 3×3 conversion matrix for each of the three intersecting triangles:

$$N_{AGC} = \begin{bmatrix} X_A & Y_A & Z_A \\ X_G & Y_G & Z_G \\ X_C & Y_C & Z_C \end{bmatrix}^{-1} \quad [vi]$$

$$N_{GCB} = \begin{bmatrix} X_G & Y_G & Z_G \\ X_C & Y_C & Z_C \\ X_B & Y_B & Z_B \end{bmatrix}^{-1}$$

$$N_{RGC} = \begin{bmatrix} X_R & Y_R & Z_R \\ X_G & Y_G & Z_G \\ X_C & Y_C & Z_C \end{bmatrix}^{-1}$$

b. Place each of the 3×3 conversion matrices inside a 5×3 sub-gamut conversion matrix and pad the remaining entries with zero. The notation $N_{AGC1,2}$ indicates the matrix element in row 1, column 2 of the 3×3 conversion matrix N_{AGC}.

$$M_{AGC} = \begin{bmatrix} 0 & 0 & 0 \\ N_{AGC1,1} & N_{AGC1,2} & N_{AGC1,3} \\ N_{AGC2,1} & N_{AGC2,2} & N_{AGC2,3} \\ N_{AGC3,1} & N_{AGC3,2} & N_{AGC3,3} \\ 0 & 0 & 0 \end{bmatrix} \quad [vii]$$

$$M_{GCB} = \begin{bmatrix} 0 & 0 & 0 \\ 0 & 0 & 0 \\ N_{GCB1,1} & N_{GCB1,2} & N_{GCB1,3} \\ N_{GCB2,1} & N_{GCB2,2} & N_{GCB2,3} \\ N_{GCB3,1} & N_{GCB3,2} & N_{GCB3,3} \end{bmatrix} \quad [viii]$$

$$M_{RGC} = \begin{bmatrix} N_{RGC1,1} & N_{RGC1,2} & N_{RGC1,3} \\ 0 & 0 & 0 \\ N_{RGC2,1} & N_{RGC2,2} & N_{RGC2,3} \\ N_{RGC3,1} & N_{RGC3,2} & N_{RGC3,3} \\ 0 & 0 & 0 \end{bmatrix} \quad [ix]$$

c. Finally, compute the element by element average of the group of 5×3 matrices:

$$M_1 = \frac{(M_{AGC} + M_{GCB} + M_{RGC})}{3} \quad [x]$$

A similar calculation follows for each of the eleven zones of the gamut in FIG. **5**F. These can all be pre-computed and saved in tables in the hardware.

There is some flexibility in the final computation of the zone matrix. The example given above used an average of the sub-gamut conversion matrices since this matched the computations of the original reference model, however, any linear combination of the matrices would be a valid solution. It may be possible to choose some other linear combination which optimizes the system with respect to some performance parameter. For example, if observer metamerism is to be reduced, certain combinations of the sub-gamut matrices may minimize the overall change of the reproduced spectrum when crossing zone boundaries. This calculation may be pre-

computed as in the above example and applied globally. It may also be computed in real time based on the xy coordinates of each pixel. This, of course, would require further analysis and hardware but does provide an option for future system enhancements.

Details and further information regarding concepts described above can be found at Poynton, C., *Digital Video and HDTV—Algorithms and Interfaces*, Morgan Kaufmann, 2003, including pg. 317 and 251, incorporated by reference herein.

5. Summary Re Color Mixing Algorithms

It can therefore be seen that the exemplary embodiments of the color mixing algorithm generally involve a method of breaking up a color space into square matrices so that it can be solved. The solution requires the inversion of a matrix, but this cannot be performed because each primary is described in terms of tristimulus values (X,Y,Z) and the inclusion of more than three primaries would result in a matrix that is non-square. The invention discloses an algorithm that essentially breaks up the non-square matrix into plural square matrices in order to solve the target color.

The result is a solution based on more colors, which provides the described advantages over the state of the art.

The result also is accomplished with reasonable processing overhead and in timely fashion for pixel-by-pixel generation. A prior art attempt to use more than three colors uses computational intense algorithms that only approximate the solution in a "least squares" method. Our disclosed solution is a two-dimensional color space approach that is streamlined and without approximation, resulting in an ideal situation for high definition video processing.

Another area not sufficiently addressed by the state of the art is display device valve response or light source error correction. In the following paragraphs we will disclose an optional error correction algorithm that accounts for time and temperature degradation. Degradation compensation is necessary for solid state devices because both chromaticity and intensity are sensitive to the aforementioned variables. In addition, component variation can be mitigated by error correction.

Simplistically, the algorithm takes pixel data represented in a universal color coordinate system, performs a color transform, and parses the result among parallel display devices or sequentially to a single device such that each pixel is represented by the combination of four or more primaries.

Flow diagram (see generally FIG. **2**B)

Video signal processed and color pixel array data extracted.

Algorithm transforms individual pixel data into an array that represents four or more primaries that would display target color.

Primary data parsed to display devices or sequential to a single device.

Image displayed with a larger color gamut and more authentic color representation than an RGB system.

The color mixing algorithm can be applied in a number of scenarios and applications. One application is a video projection system, where the color mixing algorithm processes the incoming pixel data, based on the input of an array of primaries and parses the data to display devices in a parallel or sequential manner. An alternate scenario of the same application is the video pixel data is processed and the color mixing algorithm is applied as previously stated; however a parallel algorithm is also applied to independently controllable illuminating primaries so that the target combination of all illumination is a reference white point. The advantage of adjusting the illuminating primaries to produce a reference white is that the available dynamic range of each pixel is enhanced because generally video data is encoded with a reference white. However, this is not a required feature. A second category of applications is the use in general illumination. The color mixing algorithm controls four or more sources such that their combination produces any range of colors within a gamut, defined by the primaries, in a static or dynamic manner. The illumination device could receive target color data from any number of communication protocols, not limited to DMX 512, Ethernet, or an internal data bus.

C. Error Correction Algorithm

Optionally, what will be called an error correction algorithm can be used with the color mixing algorithm described above. Some of the advantages of such feedback include, but are not limited to:

(a) if actual color is not quite true, it can add offset to correct it.

(b) provision of consistent reference white.

(c) calibration in a manufacturing environment as well as calibration at the end user's discretion.

(d) accounts and compensates for light source degradation.

Error correction algorithm **200** (see FIG. **6**A) could be implemented in software or a FPGA. As shown in the context of the system block diagram of FIG. **17**, a color sensor **202** could feed back sensed actual output color of light source **108** to algorithm **200**. Any offset between target color **201** and actual sensed color from source **108** could be detected (the "error") and algorithm **200** could adjust color mixing algorithm **100** to compensate or correct for the same.

The fact that light sources, especially Light Emitting Diodes (LED), are inherently variable is well-known. Even though LEDs are typically sorted by bin (color and intensity), there is still significant variation within each bin, to the point where each LED within a given bin is unique.

In addition, a closed-loop system using optical feedback is broadly considered important for consistent color control. See, e.g., Muthu, Subramanian & James Gaines. "Red, Green and Blue LED-based White Light Source: Implementation Challenges and Control Design." *Industry Applications Conference,* 2003. 38*th IAS Annual Meeting* (12-16 Oct. 2003). Volume 1: 515-522. Proportional Integral Derivative (PID) algorithms are widely implemented for the compensation of variability in complex systems. See, e.g., Wikipedia. "PID Controller." 05 Nov. 2005. 07 Nov. 2005

<http://en.wikipedia.org/wiki/PID_controller>.

The error correction algorithm according to this exemplary embodiment implements these two commonly-known techniques (closed-loop optical feed back and PID algorithms) for non-square matrix color systems. The lack of symmetry in these systems requires a deviation from the conventional approach to eliminate error.

FIG. **6**A illustrates the error correction algorithm **200**. The algorithm will be described with respect to the following projection system and color sensor.

1. Step **202**

The light source **108** for a projection system could utilize five colors, namely red, amber, green, cyan, and blue LEDs from a modulated output **106** (which provides a duty cycle for each source to produce a target color **201**) from color mixing algorithm **100** described above. A color sensor **202** (e.g. model number TCS230 RGB from Texas Advanced Optoelectronic Solutions, Inc. of Plano, Tex. USA.) would sense not only real time feedback of color from the light source, but intensity of the light energy from the mixed sources and produce an output signal.

2. Step **204**

Data conversion **204** of the optical sensor output signal is then accomplished as follows. A color correction transfer matrix is calculated for the sensor by the method described in "Sensing color with the TAOS TCS230," with several modifications. See Poynton, Charles. "Sensing color with the TAOS TCS230", copyright May 17, 2005 TAOS, Inc.

Specifically, the Macbeth color checker chart reflectance samples of the Poynton method referenced immediately above were replaced with the radiometric distribution of the desired combinations of the LEDs. In addition, the response curves of the red, green, and blue sensors were scaled such that the full contribution of all the light sources would result in a measurement of one across each color channel. Finally, the reference white was set equal to illuminant E. These modifications were necessary because optical sensor **202** is looking at the direct emission from a combination of sources and not the reflectance off a surface.

Sensor **202** does not have to be RGB. For example, it can be a three channel color corrected sensor as produced by MAZeT Electronic Design and Manufacturing Services of Jena, Germany. The color corrected sensor reduces the complexity of measuring accurate chromaticity data for the source(s).

The color transformation matrix is used to translate the scaled data from the sensor into chromaticity coordinates. The information is broken into three parts: x, y, and the absolute magnitude of error between the measured point and the target point.

3. Steps **205-209**

The three parts of the signal from data conversion step **204** are fed into parallel PID algorithms **206**, **207**, and **208**, where the x and y portions (see reference number **205**) are collectively used to modify the input **209** to color mixing algorithm **200**, and the third PID algorithm **208** is used for an auto-tuning function.

Algorithm **208** is tuned such that under varying conditions, the response is smooth, consistent and time-efficient. The tuning can be accomplished several ways, however the application of magnitude-of-error PID **208** to provide tuning feedback for this exemplary embodiment is configured as follows.

If the target chromaticity coordinate (target color SP **201** in FIG. **6**A) is far away, the algorithm makes a large change to input adjustment **209**. Conversely, it makes a small change if the coordinate **201** is close.

PID algorithm **206**, **207**, and **208** is implemented using the following generic equations:

Error Calculation [13]

$$e(k) = (SP - PV_f)$$

Proportional Action

$$u_p(k) = (K_c * e(k))$$

Trapezoidal Integration

$$u_I(k) = \left(\frac{K_C}{T_i}\right)\left(\sum_{i=1}^{k}\left[\frac{e(i)+e(i-1)}{2}\right]\Delta t\right)$$

Partial Derivative Action

$$u_D(k) = -K_c\frac{T_d}{\Delta_t}(PV_f(k) - PV_f(k-1))$$

PID Output

$$u(k) = u_P(k) + u_I(k) + u_D(k)$$

-continued

Output Limiting

If $u(k) \geq u_{max}$ then $u(k) = u_{max}$

and

if $u(k) \leq u_{min}$ then $u(k) = u_{min}$

$u(t) =$

$$K_c\left[(SP - PV) + \frac{1}{T_i}\int_0^t (SP - PV)dt - T_d\frac{d\,PV_f}{dt}\right]$$

In the above equations, SP is the set point or target color **201** and signal PV is the measured point or feedback from the optical sensor. The generic form is applied to x_c, y_c, and abs separately, with the exception that error is calculated for abs as follows:

$$e\_abs(K) = \sqrt{(SP_{xc} - PV_{xc})^2 + (SP_{yc} - PV_{yc})^2} \quad [14]$$

The product of the tuning function (u_tabs) and optional scaling factor (g_a) determines the value of K_c, known as gain.

$$K_c = u\_abs * g_a \quad [15]$$

The output of the x and y coordinate PID **205**, u_x_c and u_y_c respectively, modify an input **209** to color mixing algorithm **100**, as shown in FIG. **6**A. Color mixing algorithm **100** can be of the type of the examples of color mixing algorithms discussed above, or other types.

4. Optional Control

An additional layer of control could be employed such that PID algorithms **206**, **207**, and **208** could learn from previous convergence on a solution. The fundamental principle could be implemented by a simple memorization of past target points and required inputs or by devising a transformation matrix that is continually refined to represent the bridge between the assumed color coordinates of the sources and the measurement of their combinations. A system that learns could use this data to reduce convergence time in subsequent selections of the same color (when the memorization technique is used) or any color (when the transformation matrix technique is used).

5. Summary of Error Correction Algorithm

As stated previously, the closed-loop optical feedback in combination with the PID implementation, in which the optical sensor channels and system primaries are mismatched, is adapted to correct systems with more than three primaries using a low-cost optical sensor and features a self-tuning and learning function. The invention offers a customizable, high-quality, and consistent lighting tool for various markets, not limited to entertainment, architectural, film, and studio lighting.

Implementation of the closed-loop optical feedback system, using an RGB color or tristimulus value corrected sensor, includes the following:

(a) calibration of the color sensor.

(b) feeding the color sensor data into three parallel PID algorithms.

(c) the third PID algorithm provides an auto tuning function.

(d) the system can learn correction trends and use this data to reduce conversion time in subsequent selections of the same color.

(e) provide consistent reference white;

(f) characterize the response of each display device given a particular color and digital grayscale setting.

(g) calibration in a manufacturing environment and any time the end-user wishes to recalibrate their projection or illumination system.

The PID algorithm looks at error in three ways:

(1) Proportionally—from a magnitude standpoint; how far is the measurement from desired point.

(2) Integrally—continually sums the magnitude of error.

(3) Derivatively—how fast is the algorithm approaching a point based on slope. Answering the question: Is the algorithm over- or under-compensating?

It is important to note that there are many ways to tune a PID algorithm or apply a self tuning method. The one given is for example and is particularly suited for situations where the point of interest is far away and a large change is made, and if the point of interest is close, a small change is made.

The algorithm allows for correction for temperature, time, and color degradation. As LEDs heat up their dominant wavelength shifts toward red; when they cool, it shifts toward blue. There are intensity changes with temperature, especially the AlInGaP (Aluminum Indium Gallium Phosphide), which is amber and red. InGaN (Indium Gallium Nitride), which is blues, cyans, and greens tend to be more stable, however their variation is significant enough to warrant the need for correction.

Thus, this closed loop feedback compensates for time and temperature degradation and component variation. The method corrects for transient changes (e.g. temperature changes) or long term changes (e.g. lumen depreciation over thousands of hours).

It can also make the LED manufacturing process shorter and cheaper. The manufacturer would not need the best manufacturing data with this system of correction, which would save time and resources. The manufacturer and customers could be content with just bin numbers. Manufacturing calibration could include the following process. A set of red LEDs could be turned on. A spectrometer measurement is taken. That primary or chromaticity data and intensity data is then fed into the video processor board so it knows the basic operating parameters of the LEDs, at least during initial operation.

FIG. **6**B is a flow chart diagram **350** indicating a specific implementation of a general illumination LED controller for DMX-512 digital multiplexed signals communications protocol. DMX-512 is a well-known communications standard, which covers digital multiplexed signals. It is the most common communications standard used by lighting and related stage equipment.

The DMX-512 signals are processed by RS-485 Transceiver **353** into DMX values **356** which can be processed by color mixing algorithm **357**. Color mixing algorithm **357** can be that described earlier with respect to FIGS. **1-5**, which outputs instructions to duty cycle modulator **364** to, in turn, control current source **365** which then controls LED engine **366** to generate the appropriate average intensity for the given LED light source (not shown). The current source could be based on a switch mode power supply topology so that it has high efficiency (i.e. the HV9910 available from Supertex, Sunnyvale Calif.).

However, system **350** provides correction for offset between the instructed target value based on the received DMX values and the actual color generated from the LED light source. Color sensor **202** generates frequency values of R, G, and B signals representative of actual sensed colors of the LED being powered by LED engine **366**. The RGB frequencies signals from TAOS **230** color sensor **202** are measured by a color channel selectable frequency counter **351**. The RGB values are converted to x,y color coordinates using principles of step **204** to create a duty cycle compensation signal at reference numeral **359**. The compensation signal is fed back to duty cycle modulator **364** and adjusts the duty cycle of electrical power to LED engine **366** to compensate for any offset or error between the instructed color and the sensed color. As previously described, this can produce more accurate and consistent color by compensating for whatever might affect the actual produced color to differ from the instructed color.

FIG. **9** also shows additional possible optional compensation. Similar to the color sensor and compensation, an appropriate temperature sensor **354** (e.g. thermocouple or thermistor) could be operatively placed relative to the light source and its analog voltage signal, representing sensed operating temperature of the light source, can be converted to digital (reference number **355**) and processed in six channel voltage to temperature algorithm **360** to convert voltage to temperature. Data **363** about the operating characteristics of the LED being used could be stored in EEPROM **362**. Such information could include information about how color output of the LED varies with operating temperature. Sensed operating temperature could be compared to the data and a compensation instruction could be generated (see reference numeral **361**) which, in turn, could be used to generate a compensation signal from **361** which would be fed back into duty cycle modulator **364** to adjust or compensate for operating characteristics as programmed into **362**. Variations in color or output from the LED can be compensated for to promote accurate and consistent color regardless of operating temperature. It is well known that, e.g., the color and output of LEDs vary with operating temperature.

Note also that FIG. **6**B indicates other operating criteria about the particular light source could be stored in EEPROM **362** and used to correct or compensate the light source output. This would allow the manufacturer of the lighting system to build-in, at the factory, compensation sub-systems for many of the reasons there can be variation in color or light output from light sources. For example, some light sources experience lumen depreciation over operating life. Lumen depreciation could result in substantial reduction in light output from the light source, which could materially affect performance of the lighting system. There could be other color, photometric, or electrical characteristics for which compensation could essentially be programmed into the system.

Thus, as indicated at FIG. **6**B, error correction can adjust, correct or compensate for such variances or conditions. In a theatre light, color compensation could ensure an accurate, consistent true white output.

D. Narrow Spectrum Sources

The projection system discussed above that implements the aforementioned color mixing and error correction algorithms can optionally and beneficially use narrow spectrum emission sources as primary light sources. For example, FIGS. **13**A-C disclose an exemplary embodiment having an arrangement of primary light sources **812** arranged and aligned with dichroics **814**. These narrow spectrum sources **812** can be light emitting diodes (LEDs) of the type that collectively can produce hundreds of lumens. One example is the OSTAR LED from Osram Opto Semiconductor, Munich, Germany. Other narrow spectrum devices could include, but are not limited to, lasers or a filtered wide spectrum source such as xenon or UHP lamps currently sold on the market. They can be modulated in intensity on a frame-to-frame basis to provide an "electronic dynamic iris", as opposed to state of

the art mechanical iris. The fast response of the source in accompaniment with a dynamic range improvement algorithm, Scene Adaptive Contrast Control™ (SACC™), discussed in detail later, provide enhanced contrast ratio of the image based on the relative intensity of the frame itself.

The prior art tends to use multi-chromatic sources with filters. This involves complexity and cost to those systems, and does not provide the advantages of narrow spectrum sources.

Solid-state, narrow band emission sources have advantages of long expected operating life, individual primary component modulation for the correction of the reference white point, and the ability for frame-to-frame modulation to produce enhanced image contrast.

For example, the use of LEDs, a solid state source, as the primary source has the inherent advantage of allowing individual primary component modulation for the correction of the projected color. The LED also allows for the necessary frame-to-frame modulation necessary to implement what is called Scene Adaptive Contrast Control™ or SACC™, which will be discussed in more detail below. The LED devices also have a greater life expectancy, higher lumen maintenance, and low ultraviolet (UV) and infrared (IR) which contribute to display device degradation. Additionally, LEDs have no hazardous material (i.e. mercury).

Generally speaking, conventional prior art projector bulbs have a life expectancy of 1,000-3,000 hours. An LED of the type contemplated herein typically will last 50,000 hours before the source has degraded by 30% in intensity. LEDs, when properly controlled, typically have these types of advantages:

(a) High color rendering (90+)
(b) Repeatable specifiable color (0.004 duv)
(c) Precision target illumination
(d) Low maintenance, long life (70% lumen maintenance after 50 K hours)
(e) Explosion proof, high vibration resistance, withstands extreme temperatures.
(f) Color or specific wavelengths
(g) High repeatability

Although not required for the color mixing and error correction algorithms described, they can advantageously be used with them.

E. Scene Adaptive Contrast Control™ (SACC™)

Contrast is one of the most important aspects of video. SACC™ looks at a histogram analysis of the grayscale in a video image to determine if there are a lot of bright or dark colors and if the image in its entirety is dark or bright. Depending on that analysis, the light source(s) are turned up or down in intensity to change the dynamic range of the image.

As indicated at the block diagram of FIG. **17**, SACC™ contrast control algorithm **300** (see FIG. **8**) could be implemented in software or a FPGA and adjust lamp gain **314** before it is sent to the light source driver.

When there is a bright light source, the human eye will adapt to that light source. If an image is produced that is mostly dark, and then an image of the sun is produced, if one takes the same level of light, the image will look washed out because the eye adjusts to that light source. So if it is sensed that the current frame is a "dark" frame, the light source is turned down a little and the apparent contrast ratio goes up significantly.

The challenge is modulating the light source at a speed to change the source's intensity with every frame. Even though typical video frame rates are between 24 and 60 frames per second, the light source needs to be adjusted significantly faster than the reciprocal of the frame rate; otherwise, there would be a lag between the scene and the illumination level. Standard gas discharge lamps make this essentially impossible. However, LEDs respond on the order of 40 nanoseconds, so it is possible to change LED intensity in the first few moments of any given frame. Thus, SACC™ closely can match the relative brightness of an image and effectively change the dynamic range of that image or series of images frame-by-frame. Essentially this comprises dynamic lamp correction or a dynamic iris. An entire frame is reviewed. A comparison of darkness and brightness is made. Intensity is scaled down.

A state of the art approach to contrast control is to use essentially a mechanical iris to control the amount of light. However, this is relatively slow, so it may not be effective. Also, there is a very real increase in the probability the device will fail over time. SACC is essentially an "electronic iris" which is high enough speed to adjust frame-by-frame, and is also robust over long operating times.

The use of the previous described primary color mixing algorithm and corrective algorithm allow for what will be called Scene Adaptive Contrast Control™ (SACC™). SACC™ is the process of dynamically modulating the backlight of a display device based on the scene statistics. This process improves the dynamic contrast by matching the brightness of the backlight with the brightest pixels in the scene.

The underlying intent of SACC™ is to assure that the full dynamic range of the display device is being utilized for all scenes. The diagram of FIG. **7**A shows a histogram of a scene which makes use of less than the full dynamic range of the display (see curve **322** relative to "saturation value" and "maximum pixel value"). By adjusting the gain of the digital pixel values, the image can be modified so that the histogram stretches over the entire range, as shown in FIG. **7**B (see curve **324**). Then, in order to maintain the same projected scene brightness, the intensity of the lamp or light source(s) is/are decreased by the reciprocal of the pixel gain. The resulting intensity histogram (see curve **326**) is as shown in FIG. **7**C.

By comparing FIG. **7**A to FIG. **7**C, it would appear that no effective change has resulted. There is no difference in overall intensity; however, by scaling the pixel values, there is an increase in grayscale resolution. This means that details in dark or shadowed areas which are indistinguishable without SACC™ become visible with SACC™. In other words, SACC™ decreases the brightness of the light source(s) to increase the contrast ratio (dynamic range) of the projection. This can basically increase the "life-like" qualities of a projected image.

Implementation of SACC™ is reasonably straight-forward. A high level block diagram **300** is shown in FIG. **8**. The incoming five primary data, RAGCB, (collectively referred to by reference number **302**) is from the output of the XYZ to RAGCB conversion of the color mixing algorithm previously described. This data has been processed to clip negative values and the pixel values have a large number of fractional bits below the binary point due to the matrix multiply. A predetermined number of most significant bits of these values are passed to the Histogram and Gain Calculation path (see path through components **304**, **306**, and **308** of FIG. **8**). Since the algorithm only cares about the higher portions of the dynamic range, the maximum value (see reference number **304**) of RAGCB is passed to Histogram (ref. no. **306**). The purpose of Histogram **306** is to determine how much of the dynamic range is actually used by the current frame. A "Threshold value" is provided to the Histogram block. This value is set so that a small number of bright outliers do not influence the

selection of the Saturation Value or "S" that is passed to gain computation **308** which controls lamp gain with lamp gain signal "G_L" and pixel gain with pixel gain signal "G_P".

Once per frame, histogram **306** is analyzed. The frame can be processed in real time or from a frame buffer. This is accomplished by summing the histogram bin values starting at the highest bin value. When this sum exceeds Threshold, the corresponding bin is selected as the Saturation Value, S. The Pixel Gain, G_p is calculated from S and the Maximum Pixel Value, M with:

$$G_P = \frac{M}{S} \quad [16]$$

The Lamp Gain, G_l is the reciprocal of this:

$$G_l = \frac{S}{M} \quad [17]$$

For a moderately sized histogram, these calculations could be handled with a pre-calculated look-up table. The SACC™ algorithm can be implemented within the main processor.

The SACC™ is useful for such things as the following:

(a) a Scene Adaptive Contrast Control™ that can be applied to the entire display or particular areas of a display broken up into zones, wherein each zone could be illuminated by single or multiple LEDs and each modulated accordingly to the grayscale histogram analysis of each zone.

(b) the ability to characterize the response of each display device given a particular color and digital grayscale setting.

(c) the ability to modulate the intensity of the light sources on a frame to frame basis by providing an electronic dynamic iris.

(d) integration of a fast response source with a dynamic range improvement algorithm that provides enhanced contrast ratio of the image based on the relative intensity of the frame itself.

Essentially, SACC™ lowers the intensity of the light sources for dark pixels and raises intensity for bright pixels for improved contrast ratio or dynamic range, and can do so with reasonable computational overhead and at a complementary speed to most, if not all, video refresh rates.

FIG. **9** illustrates a variation on SACC™. A single frame image **371** with relatively bright portion(s) **372** (e.g. image of the sun) and relatively dark portion(s) **373** (e.g. a dark cloud) can be broken up into a plurality of histogram regions (in FIG. **9** the number of regions N is twelve. As can be seen histogram region **375** (corresponding to image portion **372**—the sun) would have a much brighter intensity value than histogram region **376** (corresponding to image portion **373**—the cloud). The histogram component **374** would direct N (here twelve) brightness levels to an illumination source and optics array **378** (having a corresponding number N of illumination sources, each with an associated optics array). The SACC™ algorithm would control brightness levels of each light source/optic of array **378**, which in turn illuminates the image on display device **379**.

F. Active Temperature Control

Solid state narrow band emission sources have the inherent advantages of long life, individual primary component modulation for the correction of the reference white point, and the ability for frame-to-frame modulation that allows an enhanced image contrast. However, these benefits come at the cost of high thermal density and sensitivity. Solid state sources require a thermal management system which maintains the sources at a constant temperature, below their maximum junction temperature, for repeatability and reliability of the system.

Incandescent light sources radiate approximately 85% of their heat. In contrast, LEDs radiate about 15% and conduct about 85%. Because an LED is a solid state semiconductor, it has a maximum junction temperature (e.g. 125 degrees C.) and a sensitivity to heat.

LEDs of the type used in system **800** of FIG. **13**A dissipate about 120 watts and have a junction to case thermal resistance of 0.67 degree per watt. This means the LED board cannot get hotter than 44.6 degrees C. The ambient environment surrounding the light source typically is 25 degrees C. Therefore, the temperature delta between source and ambient is small, which poses a challenge. Additionally, the semiconductor die area is approximately 1 square centimeter, which rivals the power densities of state of the art computer processors.

Typical prior art heat management uses heat sinks **816** (see, e.g., FIG. **10**A or FIG. **13**A) and/or movement of air. However, this can be insufficient for systems such as a video projection system **800** of FIG. **13**A. A typical heat sink for an LED of the type used herein would have to maintain a temperature only several degrees higher than the ambient temperature, which is not practical. Heat sinks are generally considered passive heat dissipating devices and are insufficient for precise temperature control. Active temperature control is beneficial to maintain a certain temperature to minimize sensitivity to heat.

Thus, a primary concern with the use of LEDs, or other light sources with similar heat issues, is the thermal management of the heat generated by each primary source. The management of the heat is critical for the reliability and repeatability of the digital video projection system.

An exemplary embodiment of a heat management system **900** that could be used with, for example, each LED, laser, or other light source is illustrated at FIGS. **16**A and B. Generally, heat management system **900** uses (a) a heat spreading assembly (with optional active control) to effectively spread and transfer heat from each of the 5-primary color sources (for example, Blue, Cyan, Red, Amber, and Green) (see FIG. **16**B) and (b) cold plate technology and a circulating cooling fluid/radiator system to radiate heat from the heat spreading assembly to the air. Active thermal management components can be added to the system to control the temperature more precisely.

The projector power supply, which powers the primary sources and control circuitry, can be cooled by cold plate technology as well.

The block diagram of FIG. **17** illustrates that one example of active heat management could be use of a thermoelectric cooler or TEC **942** that uses operating temperature feedback from the light source to adjust the amount of heat transferred away from light source **108**. The TEC **942** can be controlled by a programmable TEC controller **943**, or controller **943** could be controlled by the system processor.

1. Heat Spreading from Each Heat Source

FIG. **16**B illustrates a heat spreading assembly for each light source or light engine **930**. Light source **930** is a solid state device, comprising a semiconductor die or array **931** operatively mounted on a substrate **932**. Also, a truncated illumination optic **933** extends from light source **931** opposite substrate **932**. Optic can be of the type illustrated in more detail in FIG. **12**.

During operation, heat from the relatively small die/array **931** tends to concentrate at location **991** of substrate **932**. The heat spreading assembly, discussed below, spreads this concentrated heat over a much larger surface, which then can more effectively be managed.

a) Heat Pipe or Vapor Chamber **938**

Heat management employs a commercially available flat heat pipe or planar vapor chamber **938**. In application, heat pipe **938** would be operatively associated with each LED light source. Heat pipe **938** essentially wicks heat from its area of abutment **990** to the heat source to a separate, larger region. FIG. **16**B is roughly representative of the physical scale of the light source and the heat spreading assembly.

The principles of heat pipes are well-known. Commercially available flat heat pipe products are available from Thermacore International, Inc. of Lancaster, Pa. USA.

Planar heat pipe or vapor chamber **938** comprises a sealed copper tube encasing a low pressure fluid solution. The upper side of heat pipe **938** is larger in perimeter dimensions than light source substrate **932** and is thermally connected to light source substrate **932** with low melt alloy (LMA) layer **936**. LMAs are a type of thermal interface material (TIM). Specifically, LMAs are metals that become liquid at relatively low temperature. In this case, the melting temperature is selected to be higher than the normal operating condition of the light source, so that the LMA is a solid throughout the entire range of the semiconductor device's operation. However, the melting temperature is below the maximum junction temperature of the solid state light source. The LMA provides a high thermal conductivity path between the typical LED package (including the LED **931**, its circuit and circuit board, and its typical heat dissipating substrate **932**). Further details about LMAs can be found at U.S. Pat. No. 7,078,109, incorporated by reference herein.

The vapor chamber package **938** basically employs a sealed hollow container that physically isolates the working fluid from the outside environment. The vapor chamber or heat pipe package maintains a pressure differential across its walls, and enables heat transfers from and into the working fluid. Inside the heat pipe, the container is lined with a porous structure. The primary purpose of the porous structure is to generate capillary pressure to transport the working fluid from a condenser to an evaporator. As the temperature rises at the heat source, the heat pipe assembly boils the working fluid, turning it into a vapor. As the evaporating fluid fills the hollow heat pipe, it spreads throughout the assembly towards the cooler or lower side of the heat pipe. The working fluid then condenses at the cooler lower side, giving off heat in the process. As the working fluid cools, it condenses, and is sucked back to the evaporating section along the porous section of the heat pipe assembly. This movement of working fluid creates a thermodynamic system that moves heat from one location near the heat source to another location away from the heat source, thus spreading the high density heat at the solid state light source over a larger area. The working fluid of the heat pipe assembly provides a high thermal conduction path between the solid-state light source and the opposite side of the heat pipe.

Alternative heat spreaders are possible. An example is a metal matrix composite (MMC) heat sink. Another example is graphite laminated to a high conductivity substrate with or without thermal vias. Alternatively, a layer or plate of solid material with good thermal conductivity could be used. Examples of material would be copper and diamond (natural or synthetic). Most materials with good thermal conductivity can function as a heat spreader. However, heat plate **938** is much more efficient. The lower the operating junction temperature of the LED source, the brighter it is.

2. TEC

Heat pipe **938** provides high thermal conductivity in the xy plane for optimal heat spreading. The dispersed heat is then pumped through a solid-state heat pump, otherwise known as a thermoelectric cooler or "TEC" **942** (see commercially available TECs from Melcor Corporation, Trenton, N.J. USA), which uses the Peltier effect to force a temperature difference and move a specific amount of heat from one side of the device to the other.

TEC **942** is essentially a heat pump and a thermal control device. It is not passive like a heat sink, but rather can be termed active. It is sandwiched between heat pipe **938** and cold plate **916** by thermal interface material or layers (TIM) **940** and **944**, as shown in FIG. **16**B. TIM **940** and **944** can be thermal pads or film (phase change materials), or thermal grease or paste. They would provide effective heat transference as even two nearly flat surfaces usually have small gaps between them. Such TIMs are commercially available from a variety of sources, e.g. Dow-Corning, Midland, Mich. USA and Laird Technologies, Cleveland, Ohio USA.

Because the TEC is a p-n junction semiconductor, when current is forced across it during operation, it forces a temperature difference. One side gets relatively cool; one side relatively hot. TEC **942** uses the Peltier effect to force a temperature difference between the p-n junction of the semiconductor material of TEC **942**. The cool side is brought into abutment with planar heat pipe **938**, the hot side into abutment with the cold plate **916**. The bigger the temperature gradient is between the fluid source used to cool the object and the object itself, the more effective the system.

TEC **944** can be adjustably controlled by controller **943** (e.g. model LTC 1923 Thermoelectric Cooler Controller from Linear Technology Corp., Milpitas, Calif. USA). Instructions can be communicated from a processor (e.g. white point board processor). TEC **944** can use a PID algorithm, with feedback from thermistor **945** placed at the heat source, and be configured to actively control temperature to 38 degrees C. on the front side and a much hotter 40, 50, or even 70 degrees C. on the back. This involves tens of degrees of thermal difference, so the active thermal management system is much more effective. Also, thermistor **945** at light source **930** can feed back operating temperature to controller **943**, and controller **943** can be programmed to maintain a relatively constant temperature for light source **930**.

3. Cold Plates **916**, Cooling Fluid, and Radiator System

As shown in FIG. **16**B, TEC **942** for each light source is thermally interfaced with a cold plate **916**. The power supply also has a cold plate assembly, see reference number **916**PS.

Each cold plate assembly is essentially an enclosed chamber **922** with an inlet/outlet port. As shown in FIG. **16**B, a plurality of bosses or pins **923** extend downward from the upper interior surface of cold plate **916** to increase total surface area of that surface (in comparison to it being flat). The pin geometry and positioning is optimized to the desired thermal resistance between the fluid and the heat source at a given flow rate. Tubing **920** brings cooling fluid in and out of chamber **922**.

Cooling fluid **950** is circulated by pump **914** through fluid circuit **920** tubing or fluid conduit to and from radiator **906**. A cool fluid reservoir **912** can store a quantity of cooling fluid (e.g. 0.5 liter). The tubes **920** carry fluids past each cold plate **916**, thus drawing heat away from them. The working fluid can be water, fluorinert, liquid metal, or any other fluid that is optimized for the desired heat capacity, conductivity, turbulence through the fluid loop (heat circuit), heat load, and flow

rate of the system. The heat circuit consists of the cold plates **916**, pump **914**, and a radiator **906**.

Radiator **906** is a conventional design, having a plurality of heat radiating surfaces. Fans **903**A and B (low noise and relatively low speed) move ambient air **901**, filtered through air filter **902**, through air duct **904** and over and thru radiator **906**. Heat extracted from the five light sources and power supply by the cold plates, and moved to radiator **906** by heated fluid section **922** of the fluid circuit, is removed from radiator **906** by the pressurized air **905**. A heated air output **907** can be directed into the ambient air around the projector.

As can be appreciated, the specific components to create the heat management system **900** of FIGS. **16**A and B can vary according to need. By using cold plates, relatively substantial quantities of heat can be effectively removed from the light sources and dispersed into the air.

As shown in FIG. **16**A, the cooling fluid circuit **920** has two pathways, one flowing in series through cold plates **916** for the amber, red, cyan, and blue color sources, and the other in series through the cold plates for the color green and for the power source. This arrangement is selected for the following reasons. First, the green LED light source has the highest power rating, and the amber and red LEDs are most sensitive to heat, so cooling fluid **950** is first presented to them. On the other hand, the power supply is less sensitive, as are cyan and blue LEDs, so cooling fluid is presented to them after passing through cold plates for the others. Second, minimization of the number of parallel flow paths allows for better flow rates of the cooling fluid **950** for heat transfer than if each cooling plate was in parallel.

The two flow paths will be relatively balanced in flow rate. Pump **914** (e.g. model DDC-2 from Laing Thermotech, Inc., Chula Vista, Calif. USA) was selected because it is relatively low noise and relatively small in size. It can pump around 400 liters/hour.

The fluid circuit would be sealed. Tubing **920** is of robust, durable non-permeable material. If material like Norprene® (Saint Gobain of Courbevoie, France) is used, it would be clamped over nipples at junctions to the components. If copper, it could be soldered. Pressure tests using vacuum could be conducted to remove all air bubbles and confirm the fluid circuit is sealed.

4. Assembly of Heat Management System

The assembly of FIG. **16**B can be constructed as follows. The combination of cold plate **916**, TEC **942**, heat pipe **938**, and light source **930** would be stacked vertically, with low melt alloy **936**, and TIM **940** and **944** in place where indicated. A mechanical force would be applied to compress the combination of parts, and it would be heated to above the melt point for low melt alloy **936**. This procedure would make the TIM layers and low melt alloy layer as thin as possible, which promotes better heat transfer (generally thermal resistance decreases with decrease in bond line thickness). The low melt alloy **936** would also change phase to a liquid and flow into even tiny gaps between the lower surface of light source substrate **932** and the upper surface of heat pipe **938**. The subassembly would then be cooled and alloy **936** would change state back to a solid. It would essentially solder substrate **932** to heat pipe **938**. The alloy **936** would essentially be "married" to the heat pipe **938** and be metal-to-metal contact.

5. Operating Features

Noise is a substantial issue with video projectors, particularly for home entertainment purposes. The reduction of noise in the projection system is a beneficial result that increases the user's enjoyment of a projected video display or illumination system. Using heat management system **900** allows use of a low speed fan(s) **903** (or to run fans at lower speeds), so that the projector is relatively quiet. It is believed that typically fan(s) **903** could be operated in a manner where noise would not exceed around 30 decibels, which is the level of noise in a recording studio. Pump **914** can also be low noise.

Optionally, temperature of cooling fluid **950** could be monitored by an appropriate sensor. If temperature exceeded a certain level, appropriate circuitry could reduce power, increase fan speed, or shut the whole projector down as an automatic failsafe.

Optionally, temperature of heated output air **907** exiting from radiator **906** could be measured (e.g. with a thermistor). Speed of fans **903** could be increased or total power consumption reduced as the air temperature rises. Additionally, fans **903** could be four-wire fans for adjustment of speed. A tachometer could measure fan speed and a pulse width modulated or other electrical signal could adjust fan speed. If the tachometer does not sense any rotation of a fan, it can assume the fan has malfunctioned and cause the other fan to increase speed.

Two fans **903** are used in the embodiment of FIG. **16**A to spread air flow over a larger area. This allows use of a radiator with a relatively large surface area.

The thermal management system **900** promotes the following:

(a) low melt alloys that provide a high thermal conductivity path between a light source and a heat dissipating substrate.

(b) flat heat pipes to provide high thermal conductivity in the XY plane for optimal heat distribution.

(c) a video projection system that uses a solid state heat pump/thermal electric cooler to force a temperature difference across the substrate that moves heat from one side of the device to the other.

(d) a digital video projection system having a fluid filled heat circuit that circulates the fluid to cool the light source.

(e) a thermal management system that allows for precise and consistent control of the temperature of the solid-state light source, enabling consistent chromaticity and intensity.

Thermal management system **900** can be scaled and configured as needed for system **800**. Mathematical modeling and empirical testing can establish the needed configuration. At a minimum, system **900** should not allow temperature to exceed the junction temperature for the semi-conductor light source.

Thermal management system **900** is designed to be long-lasting and durable. LEDs have normal operating lives on the order of 50K hours. TECs of the type described can have mean time before failure (MTBF) on the order of 200K hours. Heat pipes of the type described have, as a practical matter, unlimited life. Although use of water or other fluids with a commercial projection system is counter-intuitive, system **900** is sealed, robust, and should outlast the LEDs.

It is believed that active temperature management may extend the MTBF of LEDs.

The exemplary embodiment thermal management system described above is but one form heat management could take. It is to be understood, however, that it does not preclude the use of the more traditional devices such as fans and heat sinks.

Some alternatives for heat management include forced air convection, or a fan over a heat sink.

G. Optic System

The method of integrating more than three primary colors to produce a target color, as discussed above, can be used for a number of various applications and can be implemented with a number of optic systems.

1. Three Lens Projector

FIGS. **10**A-D and **11** disclose a three projection lens system projector **870** that has three lenses **872**, **874**, and **876** that project light and mix it onto a viewing surface. Each projec-

tion lens is mounted at the end of an optical chamber **873**, **874**, and **877**, respectively (see also FIG. **11**). Though having only three projection lenses **872**, **874**, and **876**, projection system uses five color sources (e.g. LEDs or some other high intensity light sources—not shown), each illuminates a display device **880**, **882**, **884**, **886**, and **888**, respectively. The display devices control the amount of light transmitted to and projected by the corresponding lenses **872**, **874**, or **876**.

FIG. **11** shows basically a horizontal cross-section of each chamber **873**, **875**, and **877** and illustrates how five light sources are combined into three projection lenses. Each lens **872**, **874**, and **876** has an associated chamber **873**, **875**, or **877**. Two of the chambers, **873** and **877** have two primary light sources (here LCD displays **880** and **886** for chamber **873**, and displays **884** and **888** for chamber **877**). Chamber **875** has only one display **882**. The arrangement of FIGS. **10**A-D and **11** allows placement of all light source/display combinations relatively close to its lens which reduces light loss.

The triple projection lens system allows for green to be very close in spectral content to cyan or amber without interference. The advantage of having the spectral content of green close to another primary component is that it allows for increased brightness on the screen without increasing etendue beyond the current value. It is preferable that the green light source have its own projection lens because the green wavelength is the most predominant color when generating white light.

The other two chambers combine two colors. A dichroic intentionally placed at an angle to the nominal light direction from both sources (30°/60°), has coatings that only allow the color of light intended to pass. The 30°-60° angle is selected for the most efficient transmission and reflection of light. As is well known, it is more efficient than 45°-45°. A 20-70° could be even more efficient, but may be less adaptable to this projection application.

The use of three projection lenses keeps distances of display devices to their respective projection lens very close. All five colors are grouped into three pieces, so effectively system **870** has the same advantages as a RGB projector as far as LCD distance to the lens. In other words, note how LCD **886** and **888** can be placed quite near its respective lens **872** and **876**. This allows for a relatively short light path length for each. This not only allows for a more compact projector, but also for less light loss, which tends to occur with increasing distance. Thus, two additional colors can be added to projector **870**. The color mixing algorithm **100** could be used for increased color gamut. Higher screen and white luminance can be created by projecting only green through one of the three lenses because of green's disproportionately large contribution to the reference white. Even though the remaining four colors must be combined in pairs relative to the other two projection lenses, the light paths are kept short to avoid light loss by use of a single dichroic.

FIGS. **10**A-D show the relative locations of the display device, the LED or other solid state light source, with truncated optic **840** as shown in FIG. **12**, as well as a thermal management system **900**, as shown and described with respect to FIGS. **16**A and B.

2. Single Projection Lens, Five Color Systems

FIGS. **13**A-C illustrate another five color projector **800**. But note that each of the five different LED light sources **812** are positioned in generally the same plane, and at different orientations to the optical path through a single optic **850**. Projector **800** uses one projection lens as opposed to the three of projector **870** of FIGS. **10**A-C and **11**. Similarly, projector **800** uses monochromatic solid state narrow band emission sources (e.g. LEDs or LED arrays) which are controlled in intensity by color mixing algorithm **100**.

In this embodiment, dichroics **814** are used to combine the five sources **812** into one. The five sources could be any narrow spectrum light. An example of the specific colors could be as follows:

Color	Wavelength (nm)
Blue	less than 470
Cyan	470 to 510
Green	510 to 550
Amber	550 and 615
Red	greater than 615

These ranges given are for specific dichroic designs and could be modified to incorporate other primary colors or change the wavelength composition of the primary components.

Dichroic mirrors **814** are placed along the optical paths for each light source as shown. FIG. **13**C indicates the combination of each light source as two pairs B/C and A/R of sources **812** are first preliminarily combined, then G (green) is combined with B/C, and finally BCG is combined with RA at the output.

A conventional 45° split dichroics system is used in FIGS. **13**A-C. Each dichroic comprises a plate of light transmitting glass with thin films of dielectrics deposited thereon. Each layer is nanometers thick. Each thickness creates essentially a resonant chamber. Whenever a wavelength of light enters that chamber, when it is equal to typically four times the thickness, the layer becomes resonant. By well known methods, the thin films or layers are built up on a glass plate so they reflect certain wavelengths (that is colors), and thus transmit other wavelengths (colors) (e.g. reflect blue, transmit red or visa versa).

The configuration of FIGS. **13**A-C serves two main purposes for projection system **800**. First, all sources **812** are brought as close as possible to projection optics **850**. Light is diverging, so the farther away the display device or source is from the projection optic, the larger the projection optic has to be in order to collect all the light. Conversely, the shortest light path loses the least amount of light. It is, of course, beneficial to maintain the greatest amount of light in the projection system.

Second, it conserves etendue. The method of combining all five sources with the dichroics "tricks" the system into "seeing" one LED array when really there are five. This is extremely useful in projecting light. All the light ends up being at the same point with the colors combined.

FIG. **14** illustrates an alternative embodiment of a five color, single lens projection system but with 30°-60° dichroics.

3. Single White Light Source, Five Color Projection System

FIG. **15**A is a view of an alternative embodiment of a five color, single lens projection system **860** with 30°-60° dichroics, and FIG. **15**B has 45° dichroics. Note, however, the primary difference of the optic system is that a single white light source **861** is the input.

A first set of dichroics **862***a-d* are used as beam splitters to break white light **861** up into five colors B, C, G, A, R. A second set of dichroics or mirrors **866***a-d* re-direct the monochromatic light into corresponding display devices **864**B, **864**C, **864**G, **864**A, and **864**R. A third set of dichroics **868***a-d* recombines the light from the display devices into the single

output. All optical paths could be made equal. The dichroics would be selected to pass/reflect the appropriate wavelengths of light.

4. Truncated Illumination Optic

FIG. **12** illustrates an embodiment of an optic **840** that could be used with display devices requiring polarized light (for example, an LCD) described herein to increase efficiency of illumination of the display.

As shown, an LED source **842** emits light which is directed by reflector **841** into truncated illumination optic **843** which has total internal reflection (TIR). A quarter-wave retarder **844** and a reflective polarizer **845** are operatively positioned at the output end of optic **843**.

As illustrated in FIG. **12**, light beam **846** from source **842** would first travel part way down optic **843** (see portion **846***a*) and strike the interior of optic **843**. By TIR, it reflects at an angle and travels to the output end of optic **843** (portion **846***b*). It passes through quarter-wave retarder **844** and strikes reflective polarizer **845**.

A portion of light beam **846** (portion **846***e*) would be polarized by polarizer **845**, and would project from optic **843** as indicated to illuminate the display with polarized light, such as LCD **880** of FIG. **10**A.

A portion **846***c*, not allowed to pass by polarizer **845**, would be reflected and travel back through retarder **844** into optic **843**, bounce by TIR off of an interior surface of optic **843** (ray portion **846***d*), strike reflector **841**, and "recycle" back along paths **846***a* and *b*. Because portion **846**C passes twice through quarter wave retarder **844**, it would essentially be converted to a polarization that would pass through polarizer **845** the second time.

This arrangement provides for what might be called polarization recycling. Polarization-recycling techniques have been proposed to increase the efficiency of illumination of LCD panels. For proper operation, illumination with polarized light is necessary, but a typical lamp generates unpolarized light. Passing the unpolarized source light through a polarizer on the way to the LCD panel wastes the half of the light that is in the undesired polarization. To increase the efficiency of illumination (could be on the order of 20 percent), system **840** essentially "recycles" the otherwise wasted light, converting the undesired polarization to the desired one.

Details regarding polarization recycling can be found at a variety of sources.

H. Options and Alternatives

As can be fully appreciated by those of skill in the art, the exemplary embodiments are but specific examples of some of the forms the invention can take. Variations and alternatives to the exemplary embodiments are possible. Variations obvious to those skilled in the art will therefore be included within the scope of the invention, which is defined solely by the appended claims.

For example, the exemplary embodiments primarily discuss examples using LED light sources. However, other sources are possible. In fact almost any source is possible. For example, a white bulb could be used as a source. Dichroics could be used to break the white source up into the four or more colors, and then recombine them with the color mixing algorithm. The same thing could be done with a white LED. Xenon and UHP lamps are some other examples of sources.

The combination of the conventional solid state light source technology and disclosed thermal management and optical systems allows a video projector to produce more than 250 lumens incident on the viewing screen. In order to view content at a reasonable size and ambient light level, this level of illumination or greater is required.

Furthermore, specific examples are given for mixing four and five colors. The invention can also be implemented for greater than five sources.

Also, the examples primarily discuss use with projectors, such as video projectors. However, aspects of the invention can be used in the context of direct view displays of video. Also, as briefly mentioned, aspects of the invention can be used in light projectors for lighting applications, as opposed to projecting or displaying video content. Entertainment, stage, film, architectural, and studio lighting, as well as underwater lighting are other examples. TV, home theatre, commercial movie theatre, and dynamic or static content based signage, handheld devices (iPod, cell phone, laptop), console or computer video games, and monitors are other possible applications.

Additionally, certain aspects of the invention can be used independently of other aspects. For example, FIG. **17** illustrates how color mixing algorithm **100**, error correction algorithm **200**, SACC™ contrast control **300**, and active heat management **942** can be used together. It is to be understood, however, that color mixing algorithm can be used independently of these other aspects for a variety of application so long as more than three colors are mixed. Error correction algorithm **200** could be used with any light source and is not limited to four or more light source systems. Similarly, SACC™ contrast control is not limited to use with algorithms **100** and/or **200**, nor is active heat management.

What is claimed is:

1. A method for using an apparatus having a processor and at least four light sources to generate at least four primary colors to generate a target color, wherein each of the at least four primary colors form a vertex of a gamut area in a CIE color space and the target color is definable using chromaticity coordinates in the CIE color space, wherein the gamut area includes sub gamut areas having vertices formed by the primary colors, and wherein each of the sub gamut areas overlap with at least one other of the sub gamut areas such that at least two overlapping sub gamut areas contain the chromaticity coordinates of the target color, the method comprising:

determining which of the sub gamut areas contain the chromaticity coordinates of the target color to identify the at least two overlapping sub gamut areas that contain the chromaticity coordinates of the target color;

using square matrices to perform a color mixing algorithm to calculate a solution for each of the at least two overlapping sub gamut areas that contain the chromaticity coordinates of the target color;

calculating proportional values of each of the primary colors for the target color, wherein calculating proportional values of each of the primary colors includes using the calculated solutions for the at least two overlapping sub gamut areas that contain the chromaticity coordinates of the target color to calculate the proportional values of each of the primary colors for the target color; and

providing an output control signal to control an intensity of each of the at least four light sources using the calculated proportional values to generate the target color or to instruct a display device to control pixel data for the target color.

2. The method of claim **1** wherein the light sources are solid state light sources.

3. The method of claim **2** wherein the solid state light sources are light emitting diodes.

4. The method of claim **2** wherein the solid state light sources are lasers.

5. The method of claim **2** wherein the primary colors include amber, red, blue, and green.

6. The method of claim 2 wherein the primary colors include amber, red, blue, cyan, and green.

7. The method of claim 2 further comprising thermally managing heat generated by the light sources by spreading the heat.

8. The method of claim 2 further comprising thermally managing heat generated by the active cooling of the light sources.

9. The method of claim 2 including comparing actual color of the light sources with the target color and adjusting operation of the light sources to correct for any offset.

10. The method of claim 2 further comprising characterizing the response of each light source to a digital grayscale setting.

11. The method of claim 2 further comprising calibrating each light source in a manufacturing environment.

12. The method of claim 11 further comprising recalibrating each light source.

13. The method of claim 1 further comprising utilizing the proportional values to produce pixel data for a display device for each primary color.

14. The method of claim 13 further comprising sequentially presenting the pixel data to each display device.

15. The method of claim 13 further comprising presenting the pixel data in parallel to each display device.

16. The method of claim 13 further comprising illuminating or backlighting each display device to project or present an image.

17. The method of claim 1 further comprising utilizing the proportional values to drive the light sources to compositely produce a reference white color.

18. The method of claim 17 further comprising using each light source to illuminate a display device.

19. The method of claim 1 further comprising utilizing the proportional values to drive the light sources to produce a desired illumination color and projecting the desired illumination color.

20. The method of claim 16 further comprising using the light sources to project video on a frame-by-frame basis and modulating the intensity of the video on a frame-by -frame basis.

21. The method of claim 20 further comprising controlling the modulation using a dynamic range improvement algorithm that provides enhanced contrast ratio based on an image based on the relative intensity of the frame itself.

22. The method of claim 20 further comprising minimizing focal length between the light sources and a projection of the light sources.

23. The method of claim 22 wherein minimizing focal length includes merging at least two light sources using a split dichroic.

24. The method of claim 1, further comprising correcting for offset between the target color and an actual color produced by one of the light sources comprising:

measuring actual color produced by one of the light sources;

comparing the actual color to the target color;

adjusting the light source to reduce or eliminate any offset.

25. The method of claim 24 further comprising measuring actual intensity of the light source.

26. The method of claim 24 further comprising measuring temperature of the light source and adjusting the light source to reduce or eliminate operating variance from the target color based on temperature.

27. The method of claim 24 further comprising adjusting the light source to compensate for a characteristic of the light source.

28. The method of claim 27 wherein the characteristic comprises one or more of lumen depreciation or manufacturing variance.

29. The method of claim 1 further comprising thermally managing a solid state light source comprising:

spreading heat from the light source;

carrying away and dispersing the heat with a circulating fluid.

30. The method of claim 29 wherein spreading of heat comprises using a thermally conductive material with relatively large surface area compared to the light source.

31. The method of claim 29 wherein the spreading of heat comprises using a heat pipe.

32. The method of claim 31 wherein the heat pipe is a planar vapor chamber.

33. The method of claim 29 further comprising active cooling.

34. The method of claim 33 wherein the active cooling comprises using a thermoelectric cooler.

35. The method of claim 29 wherein the carrying away and dispersing of the heat comprises circulating cooling fluid by the light source and to a dispersion area.

36. The method of claim 35 further comprising passing the cooling fluid through a radiator.

37. The method of claim 36 further comprising moving air passed the radiator.

38. The method of claim 29 further comprising using thermal interface material.

39. The method of claim 29 further comprising using low temperature soldering of a heat spreader to the light source for high thermal conductivity.

40. The method of claim 1, wherein all vertices of the gamut area are primary colors, the vertices formed by the at least four primary colors include a plurality of unique combinations of three vertices of the gamut area, each unique combination of three vertices of the gamut area form a triangle, and each triangle forms one of the sub gamut areas.

41. The method of claim 40, wherein:

using square matrices to perform the color mixing algorithm includes performing the color mixing algorithm for each triangle that contains the CIE color space chromaticity coordinates of the target color; and

calculating proportional values of each of the primary colors includes performing a linear combination of the values for each of the primary colors for all triangles that contain the CIE color space chromaticity coordinates of the target color to calculate proportional values of each of the primary colors for the target color.

42. The method of claim 40, wherein determining which of the sub gamut areas contain chromaticity coordinates of the target color in CIE color space includes, for each triangle, performing a cross correlation function of:

a first side vector extending from a first vertex to a second vertex of the triangle with a first target vector representative of the target color to determine a side of the first side vector where the target color is located;

a second side vector extending from the second vertex to a third vertex of the triangle with a second target vector representative of the target color to determine a side of the second side vector where the target color is located; and

a third side vector extending from the third vertex to the first vertex of the triangle with a third target vector representative of the target color to determine a side of the third side vector where the target color is located.

43. The method of claim 1, wherein each unique combination of three vertices of the gamut form a triangle, and the sub gamut areas are formed by intersecting triangles.

44. The method of claim 43, wherein the at least four light sources includes n light sources, and each of the n light sources is configured to produce a unique primary color, and wherein using square matrices to perform the color mixing algorithm includes:

calculating an inverse of a square 3×3 matrix to form a 3×3 conversion matrix for each of the intersecting triangles;

placing each of the 3×3 conversion matrices inside of an n×3 sub-gamut conversion matrix, padding remaining entries in the sub-gamut conversion matrix with zeroes; and

performing an element-by-element linear combination of the n×3 matrices to calculate proportional values of each of the primary colors to generate the target light.

45. The method of claim 44, wherein the linear combination is a sum or an average.

46. The method of claim 43, wherein the at least four light sources includes 5 light sources, and each of the five light sources is configured to produce a unique primary color, and wherein using square matrices to perform the color mixing algorithm includes:

calculating an inverse of a square 3×3 matrix to form a 3×3 conversion matrix for each of the intersecting triangles;

placing each of the 3×3 conversion matrices inside of an 5×3 sub-gamut conversion matrix, padding remaining entries in the sub-gamut conversion matrix with zeroes; and

performing an element-by-element linear combination of the 5×3 matrices to calculate proportional values of each of the primary colors to generate the target light.

47. The method of claim 43, wherein determining which of the sub gamut areas contain chromaticity coordinates of the target color in CIE color space includes performing a cross correlation function of an interior vector extending between two vertices of the gamut with a target vector representative of the target color to determine a side of the interior vector where the target color is located.

48. A method for using an apparatus having a processor and at least four light sources to generate at least four primary colors to generate a target color, wherein each of the at least four primary colors form a vertex of a gamut area in a CIE color space, and wherein the gamut area includes at least two sub gamut areas, the method comprising:

determining which of the sub gamut areas contain chromaticity coordinates of the target color in CIE color space;

using square matrices to perform a color mixing algorithm for sub gamut areas that contain the CIE color space chromaticity coordinate of the target color;

calculating proportional values of each of the primary colors to generate the target color; and

providing an output control signal to control an intensity of each of the at least four light sources to generate the target color or to instruct a display device to control pixel data for the target color,

the method further comprising utilizing the proportional values to drive the light sources to produce a desired illumination color and projecting the desired illumination color.

49. A method for using an apparatus having a processor and at least four light sources to generate at least four primary colors to generate a target color, wherein each of the at least four primary colors form a vertex of a gamut area in a CIE color space, wherein the gamut area includes at least two sub gamut areas, and wherein each unique combination of three vertices of the gamut form a triangle and each triangle forms one of the sub gamut areas, the method comprising:

determining which of the sub gamut areas contain chromaticity coordinates of the target color in CIE color space;

using square matrices to perform a color mixing algorithm for sub gamut areas that contain the CIE color space chromaticity coordinate of the target color, wherein using square matrices to perform the color mixing algorithm includes performing the color mixing algorithm for each triangle that contains the CIE color space chromaticity coordinates of the target color;

calculating proportional values of each of the primary colors to generate the target color, wherein calculating proportional values of each of the primary colors includes performing a linear combination of the values for each of the primary colors for all triangles that contain the CIE color space chromaticity coordinates of the target color to calculate proportional values of each of the primary colors to generate the target color; and

providing an output control signal to control an intensity of each of the at least four light sources to generate the target color or to instruct a display device to control pixel data for the target color.

50. A method for using an apparatus having a processor and at least four light sources to generate at least four primary colors to generate a target color, wherein each of the at least four primary colors form a vertex of a gamut area in a CIE color space, wherein the gamut area includes at least two sub gamut areas, and wherein each unique combination of three vertices of the gamut form a triangle and each triangle forms one of the sub gamut areas, the method comprising:

determining which of the sub gamut areas contain chromaticity coordinates of the target color in CIE color space, wherein determining which of the sub gamut areas contain chromaticity coordinates of the target color in CIE color space includes, for each triangle, performing a cross correlation function of:

a first side vector extending from a first vertex to a second vertex of the triangle with a first target vector representative of the target color to determine a side of the first side vector where the target color is located;

a second side vector extending from the second vertex to a third vertex of the triangle with a second target vector representative of the target color to determine a side of the second side vector where the target color is located; and

a third side vector extending from the third vertex to the first vertex of the triangle with a third target vector representative of the target color to determine a side of the third side vector where the target color is located;

using square matrices to perform a color mixing algorithm for sub gamut areas that contain the CIE color space chromaticity coordinate of the target color;

calculating proportional values of each of the primary colors to generate the target color; and

providing an output control signal to control an intensity of each of the at least four light sources to generate the target color or to instruct a display device to control pixel data for the target color.

* * * * *